TAPE AND REEL INFORMATION

REEL DIMENSIONS

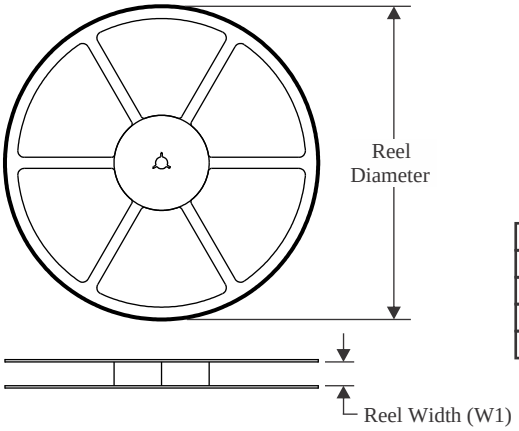

TAPE DIMENSIONS

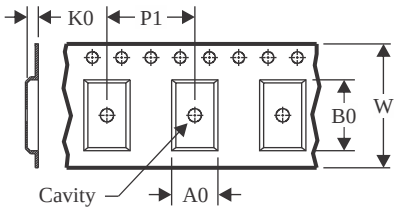

A0	Dimension designed to accommodate the component width
B0	Dimension designed to accommodate the component length
K0	Dimension designed to accommodate the component thickness
W	Overall width of the carrier tape
P1	Pitch between successive cavity centers

QUADRANT ASSIGNMENTS FOR PIN 1 ORIENTATION IN TAPE

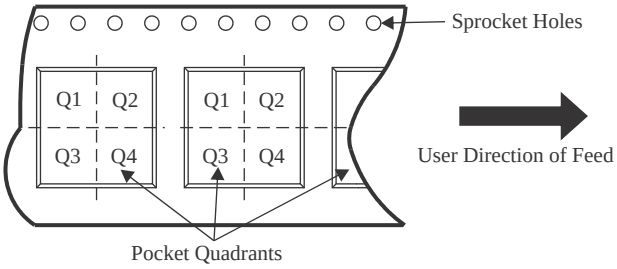

*All dimensions are nominal

Device	Package Type	Package Drawing	Pins	SPQ	Reel Diameter (mm)	Reel Width W1 (mm)	A0 (mm)	B0 (mm)	K0 (mm)	P1 (mm)	W (mm)	Pin1 Quadrant
BQ24725ARGRR	VQFN	RGR	20	3000	330.0	12.4	3.75	3.75	1.15	8.0	12.0	Q1
BQ24725ARGRR	VQFN	RGR	20	3000	330.0	12.4	3.75	3.75	1.15	8.0	12.0	Q1
BQ24725ARGRT	VQFN	RGR	20	250	180.0	12.4	3.75	3.75	1.15	8.0	12.0	Q1
BQ24725ARGRT	VQFN	RGR	20	250	180.0	12.4	3.75	3.75	1.15	8.0	12.0	Q1
BQ24725ARGRT	VQFN	RGR	20	250	180.0	12.5	3.8	3.8	1.1	8.0	12.0	Q1

TAPE AND REEL BOX DIMENSIONS

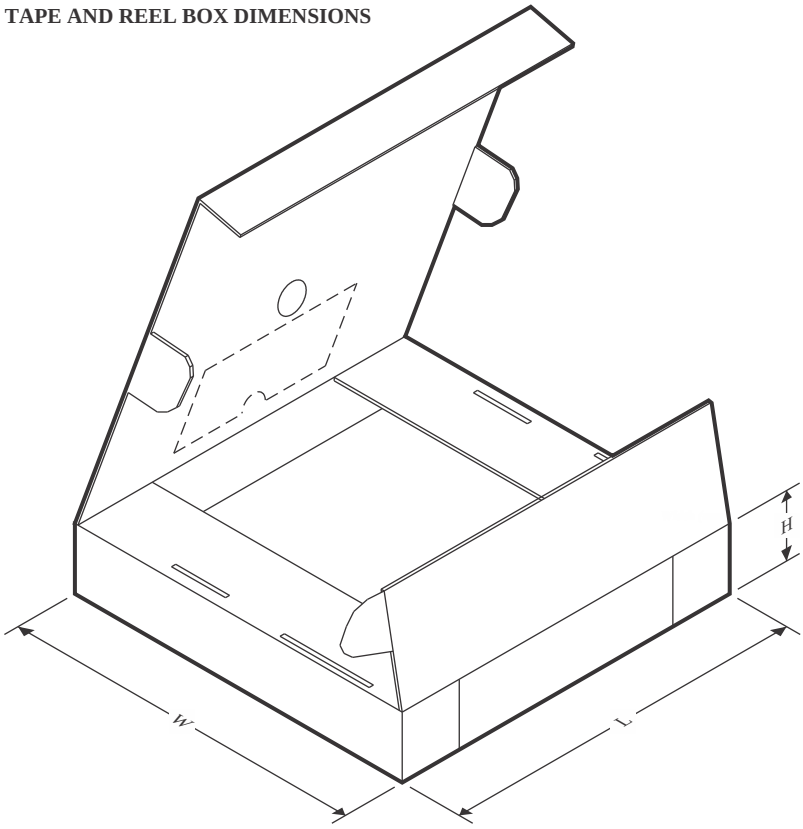

*All dimensions are nominal

Device	Package Type	Package Drawing	Pins	SPQ	Length (mm)	Width (mm)	Height (mm)
BQ24725ARGRR	VQFN	RGR	20	3000	552.0	346.0	36.0
BQ24725ARGRR	VQFN	RGR	20	3000	367.0	367.0	35.0
BQ24725ARGRT	VQFN	RGR	20	250	210.0	185.0	35.0
BQ24725ARGRT	VQFN	RGR	20	250	552.0	185.0	36.0
BQ24725ARGRT	VQFN	RGR	20	250	338.0	355.0	50.0

TUBE

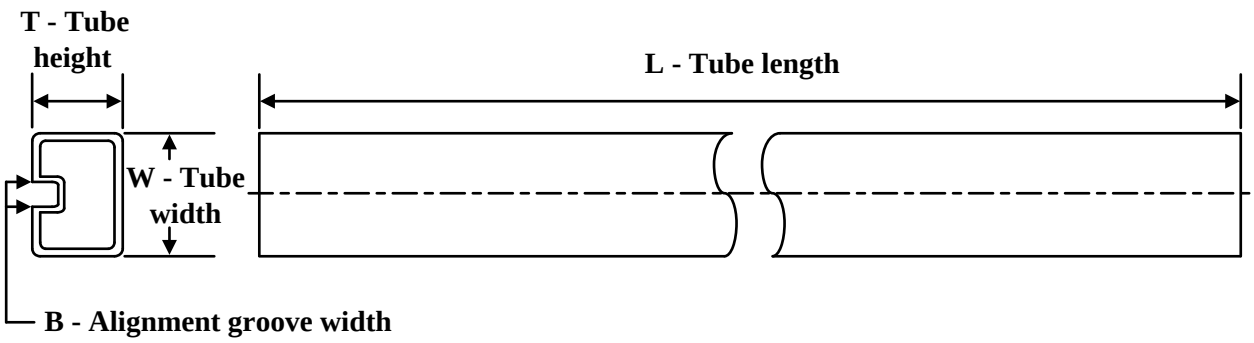

*All dimensions are nominal

Device	Package Name	Package Type	Pins	SPQ	L (mm)	W (mm)	T (µm)	B (mm)
BQ24725ARGRR	RGR	VQFN	20	3000	381.5	5	2250	0
BQ24725ARGRT	RGR	VQFN	20	250	381.5	5	2250	0