USB 专用充电端口控制器

查询样品: **TPS2513**, **TPS2514**

特性

- 依照 **USB** 电池充电技术规格，修订版本 **1.2 (BC1.2)**，支持 **USB DCP D+** 线路短接至 **D-** 线路
- 依照中国电信行业标准 **YD/T 1591-2009**，支持短接模式（支持 **D+** 线路接至 **D-** 线路）
- 支持在 **D+** 线路上施加 **2.7V** 电压，在 **D-** 线路上施加 **2V** 电压的 **USB DCP**（或者是在 **D+** 线路上施加 **2V** 电压，在 **D-** 线路上施加 **2.7V** 电压的 **USB DCP**）
- 支持在 **D+** 和 **D-** 线路上施加 **1.2V** 电压的 **USB DCP**
- 自动为连接的器件切换 **D+** 和 **D-** 线路连接
- 双 **USB** 端口控制器，**TPS2513**
- 单 **USB** 端口控制器，**TPS2514**
- 工作电压范围：**4.5V** 至 **5.5V**
- 采用小外形尺寸晶体管 **(SOT)23-6** 封装

应用范围

- 车辆 **USB** 电源充电器
- 带有 **USB** 端口的交流 **(AC) -** 直流 **(DC)** 适配器
- 其它 **USB** 充电器

说明

TPS2513 和 TPS2514 是 USB 专用充电端口 (DCP) 控制器。 一个自动检测特性监控 USB 数据线路电压，并且自动在数据线路上提供正确的电气特征，来在下列专用充电系统配置中为兼容器件充电：

1. 分压器 1 DCP，被要求在 D+ 和 D- 线路上分别施加 2V 和 2.7V 电压
2. 分压器 2 DCP，被要求在 D+ 和 D- 线路上分别施加 2.7V 和 2V 电压
3. BC1.2 DCP，被要求将 D+ 线路短接至 D- 线路
4. 中国电信标准 YD/T 1591-2009 短接模式，被要求将 D+ 线路短接至 D- 线路
5. D+ 和 D- 线路上的电压均为 1.2V

TPS2513, TPS2514 DBV PACKAGE and SIMPLIFIED APPLICATION DIAGRAM

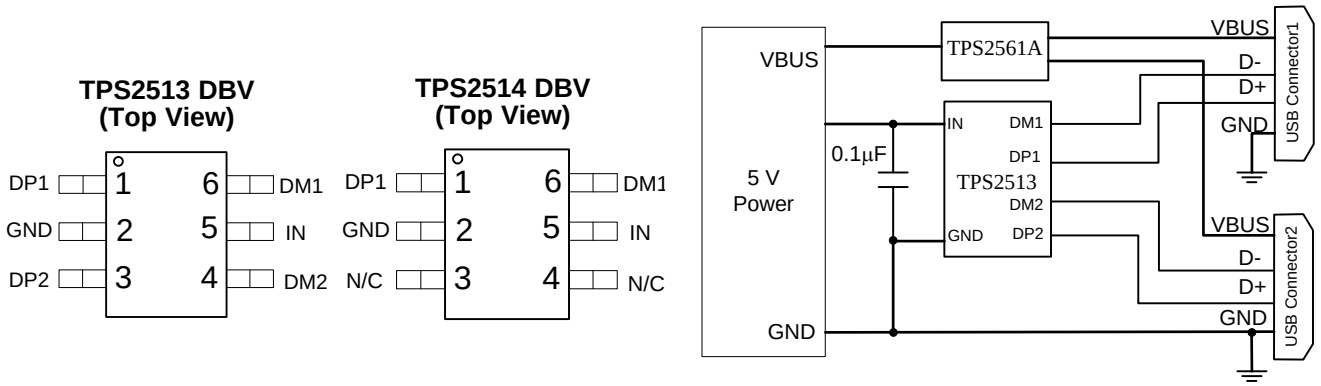

Please be aware that an important notice concerning availability, standard warranty, and use in critical applications of Texas Instruments semiconductor products and disclaimers thereto appears at the end of this data sheet.

PRODUCTION DATA information is current as of publication date. Products conform to specifications per the terms of the Texas Instruments standard warranty. Production processing does not necessarily include testing of all parameters.

Copyright © 2013, Texas Instruments Incorporated

English Data Sheet: SLVSBY8

These devices have limited built-in ESD protection. The leads should be shorted together or the device placed in conductive foam during storage or handling to prevent electrostatic damage to the MOS gates.

ABSOLUTE MAXIMUM RATINGS(1)

Over recommended junction temperature range, voltages are referenced to GND (unless otherwise noted)

			MIN	MAX	UNIT
Voltage range	IN		–0.3	7	V
	DP1, DP2 output voltage, DM1, DM2 output voltage		–0.3	5.8	
	DP1, DP2 input voltage, DM1, DM2 input voltage		–0.3	5.8	
Continuous output sink current	DP1, DP2 input current, DM1, DM2 input current			35	mA
Continuous output source current	DP1, DP2 output current, DM1, DM2 output current			35	mA
ESD rating	Human Body Model (HBM)	IN		2	kV
		DP1, DP2, DM1, DM2		6	
	Charging Device Model (CDM)			500	V
Operating Junction Temperature	T_J		–40	125	°C
Storage Temperature Range	T_{stg}		–65	150	°C

(1) Stresses beyond those listed under Absolute Maximum Ratings may cause permanent damage to the device. These are stress ratings only, and functional operation of the device at these or any other conditions beyond those indicated under Recommended Operating Conditions is not implied. Exposure to absolute-maximum-rated conditions for extended periods may affect device reliability.

THERMAL INFORMATION

THERMAL METRIC(1)		TPS2513 TPS2514 DBV (6 PINS)	UNITS
θ_{JA}	Junction-to-ambient thermal resistance	179.9	°C/W
θ_{JCtop}	Junction-to-case (top) thermal resistance	117.5	
θ_{JB}	Junction-to-board thermal resistance	41.9	
ψ_{JT}	Junction-to-top characterization parameter	17.2	
ψ_{JB}	Junction-to-board characterization parameter	41.5	
θ_{JCbot}	Junction-to-case (bottom) thermal resistance	N/A	

(1) For more information about traditional and new thermal metrics, see the *IC Package Thermal Metrics* application report, SPRA953.

RECOMMENDED OPERATING CONDITIONS

Voltages are referenced to GND (unless otherwise noted), positive current are into pins.

		MIN	MAX	UNIT
V_{IN}	Input voltage of IN	4.5	5.5	V
V_{DP1}	DP1 data line input voltage	0	5.5	V
V_{DM1}	DM1 data line input voltage	0	5.5	V
I_{DP1}	Continuous sink or source current		±10	mA
I_{DM1}	Continuous sink or source current		±10	mA
V_{DP2}	DP2 data line input voltage	0	5.5	V
V_{DM2}	DM2 data line input voltage	0	5.5	V
I_{DP2}	Continuous sink or source current		±10	mA
I_{DM2}	Continuous sink or source current		±10	mA
T_J	Operating junction temperature	–40	125	°C

Copyright © 2013, Texas Instruments Incorporated

ELECTRICAL CHARACTERISTICS

Conditions are –40°C ≤ (T_J = T_A) ≤ 125°C, 4.5 V ≤ V_{IN} ≤ 5.5 V. Positive current are into pins. Typical values are at 25°C. All voltages are with respect to GND (unless otherwise noted).

PARAMETER		TEST CONDITIONS	MIN	TYP	MAX	UNIT
UNDERVOLTAGE LOCKOUT						
V_{UVLO}	IN rising UVLO threshold voltage		3.9	4.1	4.3	V
	Hysteresis(1)			100		mV
SUPPLY CURRENT						
I_{IN}	IN supply current	4.5 V ≤ V_{IN} ≤ 5.5 V		155	200	µA
BC 1.2 DCP MODE (SHORT MODE)						
R_{DPM_SHORT1}	DP1 and DM1 shorting resistance	V_{DP1} = 0.8 V, I_{DM1} = 1 mA		157	200	Ω
R_{DCHG_SHORT1}	Resistance between DP1/DM1 and GND	V_{DP1} = 0.8 V	350	656	1150	kΩ
$V_{DPL_TH_DETACH1}$	Voltage threshold on DP1 under which the device goes back to divider mode		310	330	350	mV
$V_{DPL_TH_DETACH_HYS1}$	Hysteresis(1)			50		mV
R_{DPM_SHORT2}	DP2 and DM2 shorting resistance	V_{DP2} = 0.8V, I_{DM2} = 1 mA		157	200	Ω
R_{DCHG_SHORT2}	Resistance between DP2/DM2 and GND	V_{DP2} = 0.8 V	350	656	1150	kΩ
$V_{DPL_TH_DETACH2}$	Voltage threshold on DP2 under which the device goes back to divider mode		310	330	350	mV
$V_{DPL_TH_DETACH_HYS2}$	Hysteresis(1)			50		mV
DIVIDER MODE						
$V_{DP1_2.7V}$	DP1 output voltage	V_{IN} = 5 V	2.57	2.7	2.84	V
V_{DM1_2V}	DM1 output voltage	V_{IN} = 5 V	1.9	2	2.1	V
R_{DP1_PAD1}	DP1 output impedance	I_{DP1} = –5 µA	24	30	36	kΩ
R_{DM1_PAD1}	DM1 output impedance	I_{DM1} = –5 µA	24	30	36	kΩ
$V_{DP2_2.7V}$	DP2 output voltage	V_{IN} = 5 V	2.57	2.7	2.84	V
V_{DM2_2V}	DM2 output voltage	V_{IN} = 5 V	1.9	2	2.1	V
R_{DP2_PAD1}	DP2 output impedance	I_{DP2} = –5 µA	24	30	36	kΩ
R_{DM2_PAD1}	DM2 output impedance	I_{DM2} = –5 µA	24	30	36	kΩ
1.2 V / 1.2 V MODE						
$V_{DP1_1.2V}$	DP1 output voltage	V_{IN} = 5 V	1.12	1.2	1.28	V
$V_{DM1_1.2V}$	DM1 output voltage	V_{IN} = 5 V	1.12	1.2	1.28	V
R_{DM1_PAD2}	DP1 output impedance	I_{DP1} = –5 µA	80	102	130	kΩ
R_{DP1_PAD2}	DM1 output impedance	I_{DM1} = –5 µA	80	102	130	kΩ
$V_{DP2_1.2V}$	DP2 output voltage	V_{IN} = 5 V	1.12	1.2	1.28	V
$V_{DM2_1.2V}$	DM2 output voltage	V_{IN} = 5 V	1.12	1.2	1.28	V
R_{DP2_PAD2}	DP2 output impedance	I_{DP2} = –5 µA	80	102	130	kΩ
R_{DM2_PAD2}	DM2 output impedance	I_{DM2} = –5 µA	80	102	130	kΩ

(1) Specified by design. Not production tested.

Copyright © 2013, Texas Instruments Incorporated

FUNCTIONAL BLOCK DIAGRAM, TPS2513

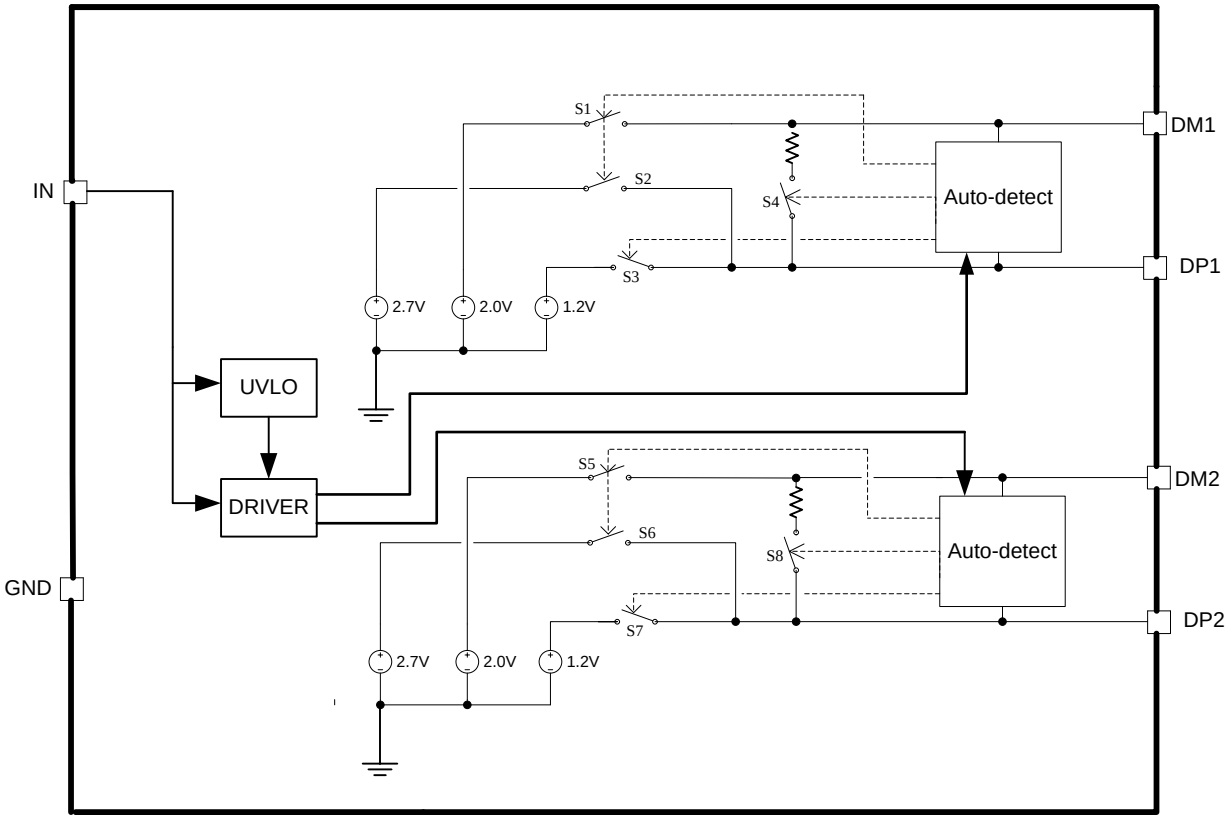

FUNCTIONAL BLOCK DIAGRAM, TPS2514

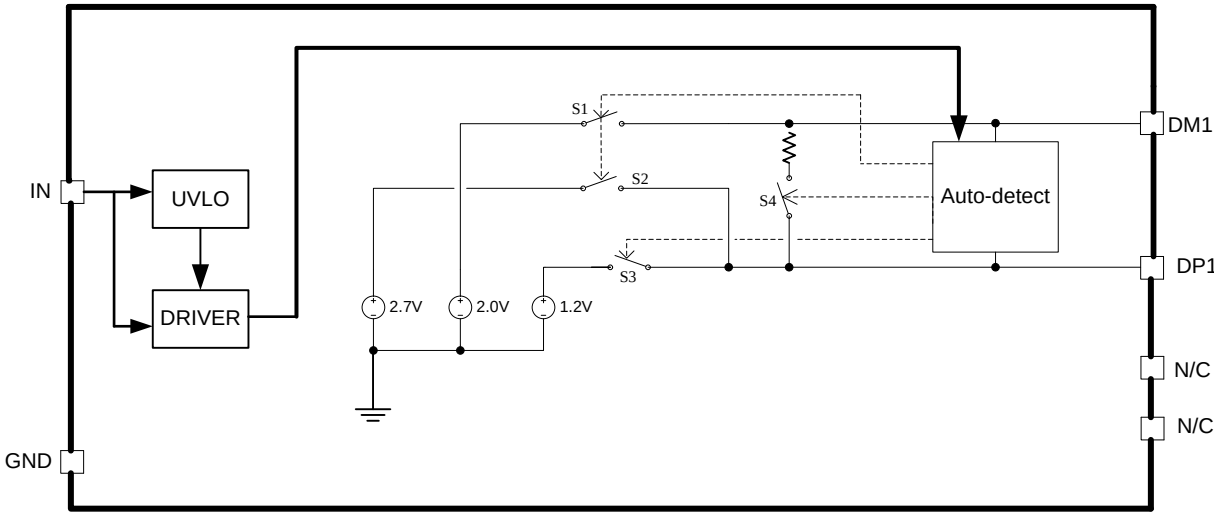

Copyright © 2013, Texas Instruments Incorporated

DEVICE INFORMATION

TPS2513 DBV (SOT23-6)
(TOP VIEW)

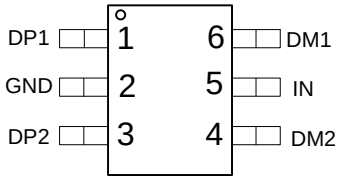

Table 1. PIN FUNCTIONS, TPS2513

NO.	NAME	TYPE (1)	DESCRIPTION
1	DP1	I/O	Connected to the D+ or D– line of USB connector, provide the correct voltage with attached portable equipment for DCP detection.
2	GND	G	Ground connection
3	DP2	I/O	Connected to the D+ or D– line of USB connector, provide the correct voltage with attached portable equipment for DCP detection.
4	DM2	I/O	Connected to the D+ or D– line of USB connector, provide the correct voltage with attached portable equipment for DCP detection.
5	IN	P	Power supply. Connect a ceramic capacitor with a value of 0.1-μF or greater from the IN pin to GND as close to the device as possible.
6	DM1	I/O	Connected to the D+ or D– line of USB connector, provide the correct voltage with attached portable equipment for DCP detection.

(1) G = Ground, I = Input, O = Output, P = Power

TPS2514 DBV (SOT23-6)
(TOP VIEW)

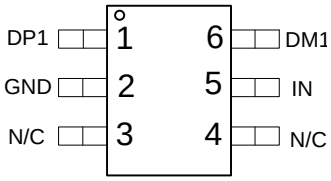

Table 2. PIN FUNCTIONS, TPS2514

NO.	NAME	TYPE (1)	DESCRIPTION
1	DP1	I/O	Connected to the D+ or D– line of USB connector, provide the correct voltage with attached portable equipment for DCP detection.
2	GND	G	Ground connection
3	N/C	–	No connect pin. Can be grounded or left floating.
4	N/C	–	No connect pin. Can be grounded or left floating.
5	IN	P	Power supply. Connect a ceramic capacitor with a value of 0.1-μF or greater from the IN pin to GND as close to the device as possible.
6	DM1	I/O	Connected to the D+ or D– line of USB connector, provide the correct voltage with attached portable equipment for DCP detection.

(1) G = Ground, I = Input, O = Output, P = Power

Copyright © 2013, Texas Instruments Incorporated

TYPICAL CHARACTERISTICS

POWER ON (DM1 and DP1)

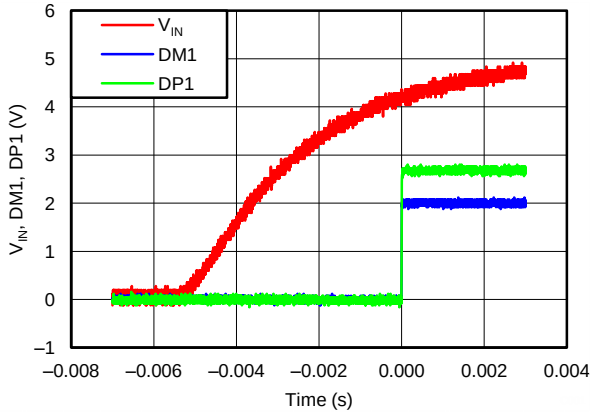

Figure 1.

POWER OFF (DM1 and DP1)

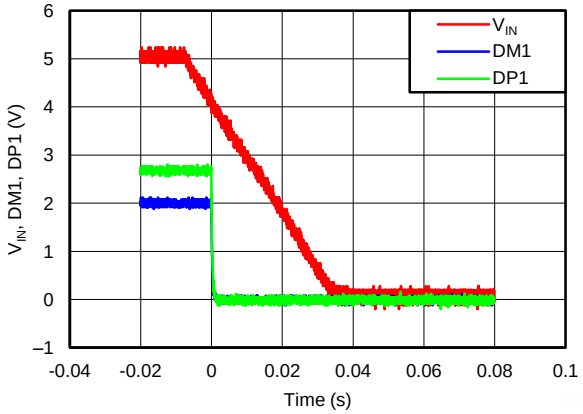

Figure 2.

POWER ON (DM2 and DP2)

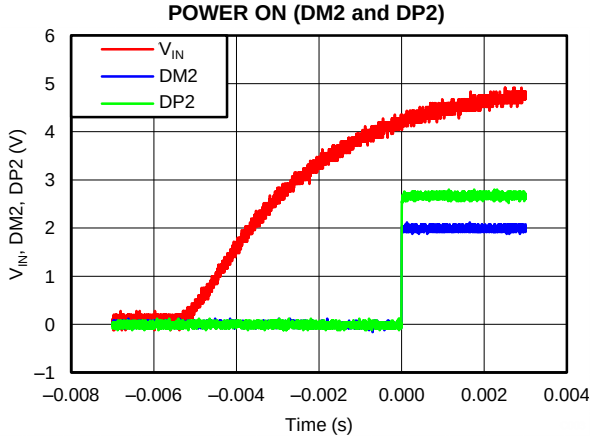

Figure 3.

POWER OFF (DM2 and DP2)

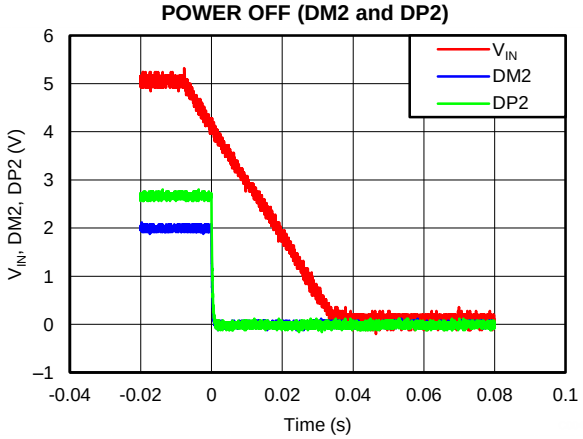

Figure 4.

DP1 and DM1 OUTPUT VOLTAGE vs TEMPERATURE

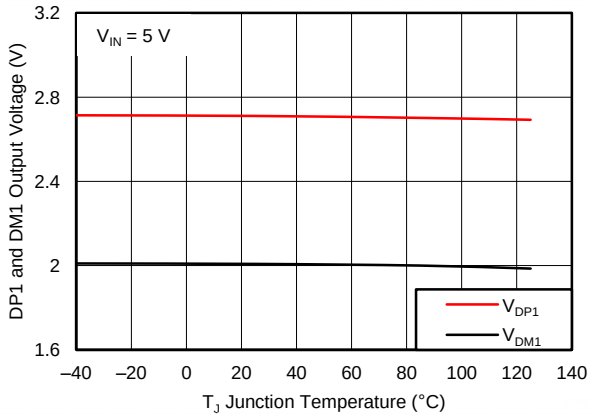

Figure 5.

DP2 and DM2 OUTPUT VOLTAGE vs TEMPERATURE

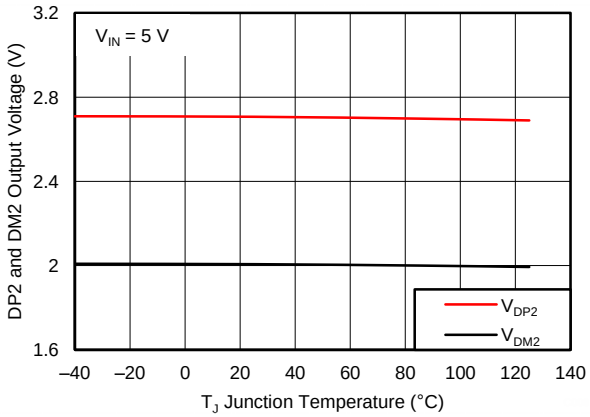

Figure 6.

Copyright © 2013, Texas Instruments Incorporated

TYPICAL CHARACTERISTICS (continued)

SUPPLY CURRENT vs TEMPERATURE

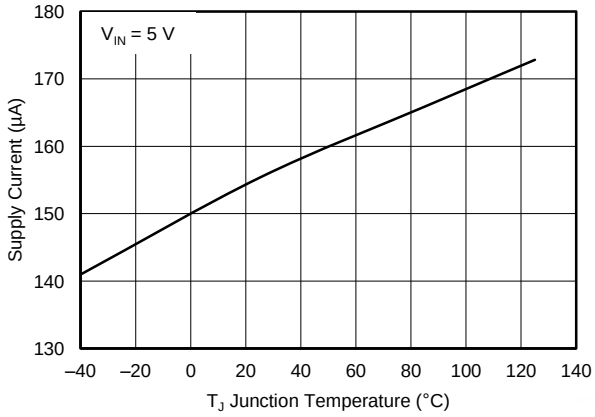

Figure 7.

DETAILED DESCRIPTION

OVERVIEW

The following overview references various industry standards. It is always recommended to consult the latest standard to ensure the most recent and accurate information.

Rechargeable portable equipment requires an external power source to charge its batteries. USB ports are convenient locations for charging because of an available 5-V power source. Universally accepted standards are required to ensure host and client-side devices meet the power management requirements. Traditionally, USB host ports following the USB 2.0 Specification must provide at least 500 mA to downstream client-side devices. Because multiple USB devices can be attached to a single USB port through a bus-powered hub, it is the responsibility of the client-side device to negotiate the power allotment from the host to guarantee the total current draw does not exceed 500 mA. In general, each USB device can subsequently request more current, which is granted in steps of 100 mA up 500 mA total. The host may grant or deny the request based on the available current.

Additionally, the success of the USB technology makes the micro-USB connector a popular choice for wall adapter cables. This allows a portable device to charge from both a wall adapter and USB port with only one connector.

One common difficulty has resulted from this. As USB charging has gained popularity, the 500-mA minimum defined by the USB 2.0 Specification or 900 mA defined in the USB 3.0 Specification, has become insufficient for many handsets, tablets and personal media players (PMP) which have a higher rated charging current. Wall adapters and car chargers can provide much more current than 500 mA or 900 mA to fast charge portable devices. Several new standards have been introduced defining protocol handshaking methods that allow host and client devices to acknowledge and draw additional current beyond the 500 mA (defined in the USB 2.0 Specification) or 900 mA (defined in the USB 3.0 Specification) minimum while using a single micro-USB input connector.

The TPS2513 and TPS2514 support four of the most common protocols:

- USB Battery Charging Specification, Revision 1.2 (BC1.2)
- Chinese Telecommunications Industry Standard YD/T 1591-2009
- Divider mode
- 1.2 V on both D+ and D– lines

YD/T 1591-2009 is a subset of the BC1.2 specification supported by the vast majority of devices that implement USB charging. Divider and 1.2-V charging schemes are supported in devices from specific yet popular device makers. BC1.2 has three different port types, listed as follows.

- Standard downstream port (SDP)
- Charging downstream port (CDP)
- Dedicated charging port (DCP)

The BC1.2 Specification defines a charging port as a downstream facing USB port that provides power for charging portable equipment.

Table 3 shows different port operating modes according to the BC1.2 Specification.

Table 3. Operating Modes Table

PORT TYPE	SUPPORTS USB2.0 COMMUNICATION	MAXIMUM ALLOWABLE CURRENT DRAWN BY PORTABLE EQUIPMENT (A)
SDP (USB 2.0)	Yes	0.5
SDP (USB 3.0)	Yes	0.9
CDP	Yes	1.5
DCP	No	1.5

Copyright © 2013, Texas Instruments Incorporated

The BC1.2 Specification defines the protocol necessary to allow portable equipment to determine what type of port it is connected to so that it can allot its maximum allowable current drawn. The hand-shaking process is two steps. During step one, the primary detection, the portable equipment outputs a nominal 0.6 V output on its D+ line and reads the voltage input on its D– line. The portable device concludes it is connected to a SDP if the voltage is less than the nominal data detect voltage of 0.3 V. The portable device concludes that it is connected to a Charging Port if the D– voltage is greater than the nominal data detect voltage of 0.3V and less than 0.8 V. The second step, the secondary detection, is necessary for portable equipment to determine between a CDP and a DCP. The portable device outputs a nominal 0.6 V output on its D– line and reads the voltage input on its D+ line. The portable device concludes it is connected to a CDP if the data line being remains is less than the nominal data detect voltage of 0.3 V. The portable device concludes it is connected to a DCP if the data line being read is greater than the nominal data detect voltage of 0.3 V and less than 0.8 V.

Dedicated Charging Port (DCP)

A dedicated charging port (DCP) is a downstream port on a device that outputs power through a USB connector, but is not capable of enumerating a downstream device, which generally allows portable devices to fast charge at their maximum rated current. A USB charger is a device with a DCP, such as a wall adapter or car power adapter. A DCP is identified by the electrical characteristics of its data lines. The following DCP identification circuits are usually used to meet the handshaking detections of different portable devices.

Short the D+ Line to the D– Line

The USB BC1.2 Specification and the Chinese Telecommunications Industry Standard YD/T 1591-2009 define that the D+ and D– data lines should be shorted together with a maximum series impedance of 200 Ω. This is shown in Figure 8.

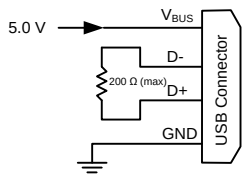

Figure 8. DCP Short Mode

Divider 1 (DCP Applying 2 V on D+ Line and 2.7 V on D– Line) or Divider 2 (DCP Applying 2.7 V on D+ Line and 2 V on D– Line)

There are two charging schemes for divider DCP. They are named after Divider 1 and Divider 2 DCPs that are shown in Figure 9 and Figure 10. The Divider 1 charging scheme is used for 5-W adapters, and applies 2 V to the D+ line and 2.7 V to the D– data line. The Divider 2 charging scheme is used for 10-W adapters, and applies 2.7 V on the D+ line and 2 V is applied on the D– line.

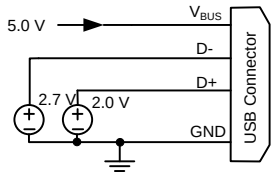

Figure 9. Divider 1 DCP

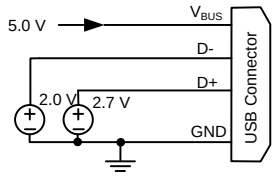

Figure 10. Divider 2 DCP

Applying 1.2 V to the D+ Line and 1.2 V to the D– Line

As shown in Figure 11, some tablet USB chargers require 1.2 V on the shorted data lines of the USB connector. The maximum resistance between the D+ line and the D- line is 200 Ω.

Copyright © 2013, Texas Instruments Incorporated

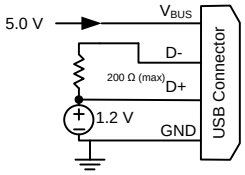

Figure 11. DCP Applying 1.2 V to the D+ Line and 1.2 V to the D– Line

The TPS2513 and TPS2514 are USB dedicated charging port (DCP) controllers. Applications include vehicle power charger, wall adapters with USB DCP and other USB chargers. The TPS2513 and TPS2514 DCP controllers have the auto-detect feature that monitors the D+ and D– line voltages of the USB connector, providing the correct electrical signatures on the DP and DM pins for the correct detections of compliant portable devices to fast charge. These portable devices include smart phones, 5-V tablets and personal media players.

DCP Auto-Detect

The TPS2513 and TPS2514 integrate an auto-detect feature to support divider mode, short mode and 1.2 V / 1.2 V modes. If a divider device is attached, 2.7 V is applied to the DP pin and 2 V is applied to the DM pin. If a BC1.2-compliant device is attached, the TPS2513 and TPS2514 automatically switches into short mode. If a device compliant with the 1.2 V / 1.2 V charging scheme is attached, 1.2 V is applied on both the DP pin and the DM pin. The functional diagram of DCP auto-detect feature (DM1 and DP1) is shown in Figure 12. DCP auto-detect feature (DM2 and DP2 of TPS2513) has the same functional configuration.

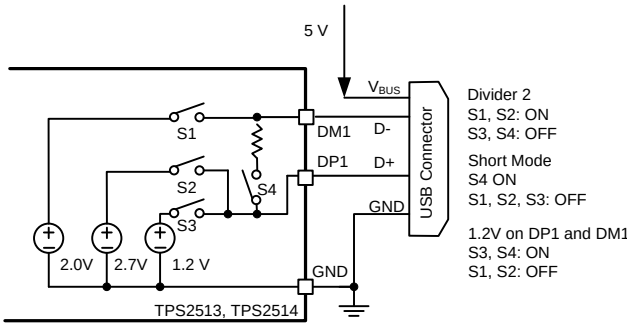

Figure 12. TPS2513 and TPS2514 DCP Auto-Detect Functional Diagram

Undervoltage Lockout (UVLO)

The undervoltage lockout (UVLO) circuit disables DP1, DM1, DP2 and DM2 output voltage until the input voltage reaches the UVLO turn-on threshold. Built-in hysteresis prevents unwanted oscillations due to input voltage drop from large current surges.

Copyright © 2013, Texas Instruments Incorporated

APPLICATION INFORMATION

The TPS2513 and TPS2514 only provide the correct electrical signatures on the data line of USB charger port and do not provide any power for the VBUS.

Divide Mode Selection of 5-W and 10-W USB Chargers

The TPS2513 and TPS2514 provide two types of connections between the DP pin and the DM pin and between the D+ data line and the D– data line of the USB connector for a 5-W USB charger and a 10-W USB charger with a single USB port. For 5-W USB charger, the DP1 pin is connected to the D– line and the DM1 pin is connected to the D+ line. This is shown in Figure 13. For 10-W USB charger, the DP1 pin is connected to the D+ line and the DM1 pin is connected to the D– line. This is shown in Figure 14. Table 4 shows different charging schemes for both 5-W and 10-W USB charger solutions. DP2 and DM2 of TPS2513 also provides this two types of connections.

Table 4. Charging Schemes for 5-W and 10-W USB Chargers

USB CHARGER TYPE	CONTAINING CHARGING SCHEMES		
5-W	Divider 1	1.2 V on both D+ and D– Lines	BC1.2 DCP
10 -W	Divider 2	1.2 V on both D+ and D– Lines	BC1.2 DCP

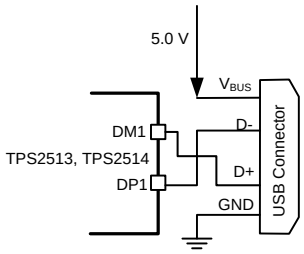

Figure 13. 5-W USB Charger Application

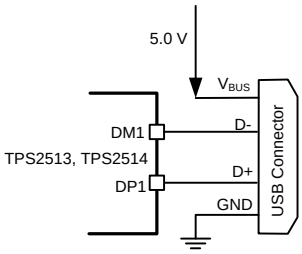

Figure 14. 10-W USB Charger Application

Layout Guidelines

Place the TPS2513 and TPS2514 near the USB output connector and place the 0.1-μF bypass capacitor near the IN pin.

REVISION HISTORY

Changes from Original (May 2013) to Revision A **Page**

- 已将器件状态从：产品预览改为：生产 1

PACKAGING INFORMATION

Orderable Device	Status (1)	Package Type	Package Drawing	Pins	Package Qty	Eco Plan (2)	Lead finish/ Ball material (6)	MSL Peak Temp (3)	Op Temp (°C)	Device Marking (4/5)	Samples
TPS2513DBVR	ACTIVE	SOT-23	DBV	6	3000	RoHS & Green	NIPDAU	Level-1-260C-UNLIM	-40 to 125	2513	Samples
TPS2513DBVT	ACTIVE	SOT-23	DBV	6	250	RoHS & Green	NIPDAU | SN	Level-1-260C-UNLIM	-40 to 125	2513	Samples
TPS2514DBVR	ACTIVE	SOT-23	DBV	6	3000	RoHS & Green	NIPDAU | SN	Level-1-260C-UNLIM	-40 to 125	2514	Samples
TPS2514DBVT	ACTIVE	SOT-23	DBV	6	250	RoHS & Green	NIPDAU | SN	Level-1-260C-UNLIM	-40 to 125	2514	Samples

(1) The marketing status values are defined as follows:
ACTIVE: Product device recommended for new designs.
LIFEBUY: TI has announced that the device will be discontinued, and a lifetime-buy period is in effect.
NRND: Not recommended for new designs. Device is in production to support existing customers, but TI does not recommend using this part in a new design.
PREVIEW: Device has been announced but is not in production. Samples may or may not be available.
OBSOLETE: TI has discontinued the production of the device.

(2) **RoHS:** TI defines "RoHS" to mean semiconductor products that are compliant with the current EU RoHS requirements for all 10 RoHS substances, including the requirement that RoHS substance do not exceed 0.1% by weight in homogeneous materials. Where designed to be soldered at high temperatures, "RoHS" products are suitable for use in specified lead-free processes. TI may reference these types of products as "Pb-Free".
RoHS Exempt: TI defines "RoHS Exempt" to mean products that contain lead but are compliant with EU RoHS pursuant to a specific EU RoHS exemption.
Green: TI defines "Green" to mean the content of Chlorine (Cl) and Bromine (Br) based flame retardants meet JS709B low halogen requirements of <=1000ppm threshold. Antimony trioxide based flame retardants must also meet the <=1000ppm threshold requirement.

(3) MSL, Peak Temp. - The Moisture Sensitivity Level rating according to the JEDEC industry standard classifications, and peak solder temperature.

(4) There may be additional marking, which relates to the logo, the lot trace code information, or the environmental category on the device.

(5) Multiple Device Markings will be inside parentheses. Only one Device Marking contained in parentheses and separated by a "~" will appear on a device. If a line is indented then it is a continuation of the previous line and the two combined represent the entire Device Marking for that device.

(6) Lead finish/Ball material - Orderable Devices may have multiple material finish options. Finish options are separated by a vertical ruled line. Lead finish/Ball material values may wrap to two lines if the finish value exceeds the maximum column width.

Important Information and Disclaimer: The information provided on this page represents TI's knowledge and belief as of the date that it is provided. TI bases its knowledge and belief on information provided by third parties, and makes no representation or warranty as to the accuracy of such information. Efforts are underway to better integrate information from third parties. TI has taken and

continues to take reasonable steps to provide representative and accurate information but may not have conducted destructive testing or chemical analysis on incoming materials and chemicals.
TI and TI suppliers consider certain information to be proprietary, and thus CAS numbers and other limited information may not be available for release.

In no event shall TI's liability arising out of such information exceed the total purchase price of the TI part(s) at issue in this document sold by TI to Customer on an annual basis.

TAPE AND REEL INFORMATION

REEL DIMENSIONS

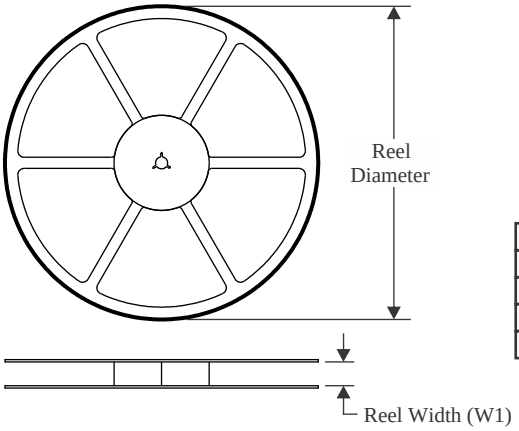

TAPE DIMENSIONS

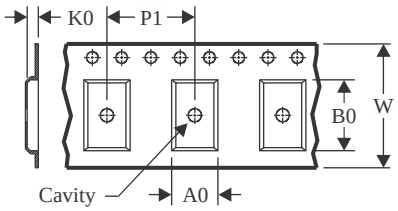

A0	Dimension designed to accommodate the component width
B0	Dimension designed to accommodate the component length
K0	Dimension designed to accommodate the component thickness
W	Overall width of the carrier tape
P1	Pitch between successive cavity centers

QUADRANT ASSIGNMENTS FOR PIN 1 ORIENTATION IN TAPE

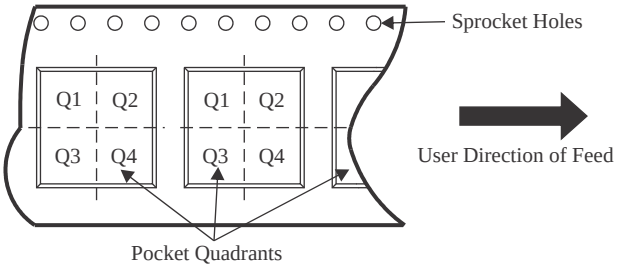

*All dimensions are nominal

Device	Package Type	Package Drawing	Pins	SPQ	Reel Diameter (mm)	Reel Width W1 (mm)	A0 (mm)	B0 (mm)	K0 (mm)	P1 (mm)	W (mm)	Pin1 Quadrant
TPS2513DBVR	SOT-23	DBV	6	3000	178.0	9.0	3.23	3.17	1.37	4.0	8.0	Q3
TPS2513DBVT	SOT-23	DBV	6	250	178.0	9.0	3.23	3.17	1.37	4.0	8.0	Q3
TPS2514DBVR	SOT-23	DBV	6	3000	180.0	8.4	3.2	3.2	1.4	4.0	8.0	Q3
TPS2514DBVR	SOT-23	DBV	6	3000	178.0	9.0	3.23	3.17	1.37	4.0	8.0	Q3
TPS2514DBVT	SOT-23	DBV	6	250	180.0	8.4	3.2	3.2	1.4	4.0	8.0	Q3

TAPE AND REEL BOX DIMENSIONS

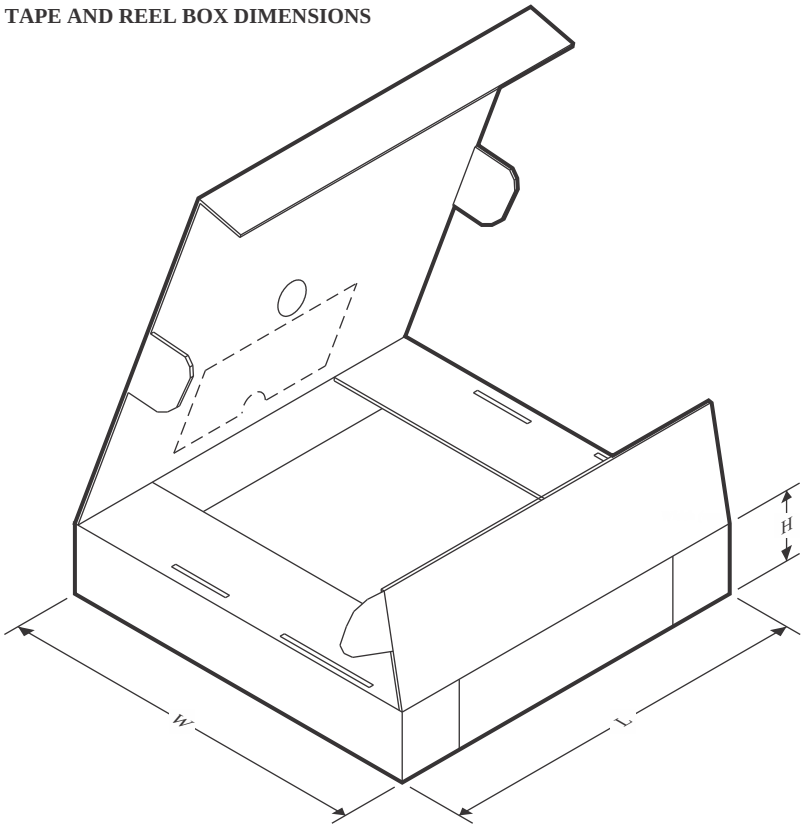

*All dimensions are nominal

Device	Package Type	Package Drawing	Pins	SPQ	Length (mm)	Width (mm)	Height (mm)
TPS2513DBVR	SOT-23	DBV	6	3000	180.0	180.0	18.0
TPS2513DBVT	SOT-23	DBV	6	250	180.0	180.0	18.0
TPS2514DBVR	SOT-23	DBV	6	3000	210.0	185.0	35.0
TPS2514DBVR	SOT-23	DBV	6	3000	180.0	180.0	18.0
TPS2514DBVT	SOT-23	DBV	6	250	210.0	185.0	35.0

重要声明和免责声明

TI“按原样”提供技术和可靠性数据（包括数据表）、设计资源（包括参考设计）、应用或其他设计建议、网络工具、安全信息和其他资源，不保证没有瑕疵且不做出任何明示或暗示的担保，包括但不限于对适销性、某特定用途方面的适用性或不侵犯任何第三方知识产权的暗示担保。

这些资源可供使用 TI 产品进行设计的熟练开发人员使用。您将自行承担以下全部责任：(1) 针对您的应用选择合适的 TI 产品，(2) 设计、验证并测试您的应用，(3) 确保您的应用满足相应标准以及任何其他功能安全、信息安全、监管或其他要求。

这些资源如有变更，恕不另行通知。TI 授权您仅可将这些资源用于研发本资源所述的 TI 产品的应用。严禁对这些资源进行其他复制或展示。您无权使用任何其他 TI 知识产权或任何第三方知识产权。您应全额赔偿因在这些资源的使用中对 TI 及其代表造成的任何索赔、损害、成本、损失和债务，TI 对此概不负责。

TI 提供的产品受 TI 的销售条款或 ti.com 上其他适用条款/TI 产品随附的其他适用条款的约束。TI 提供这些资源并不会扩展或以其他方式更改 TI 针对 TI 产品发布的适用的担保或担保免责声明。

TI 反对并拒绝您可能提出的任何其他或不同的条款。

邮寄地址：Texas Instruments, Post Office Box 655303, Dallas, Texas 75265
Copyright © 2024，德州仪器 (TI) 公司