MAX232 双路 EIA-232 驱动器和接收器

1 特性

- 符合或超出 TIA/EIA-232-F 和 ITU 建议 V.28 的要求
- 通过带 1μF 电荷泵电容器的单个 5V 电源供电
- 速率高达 120kbit/s
- 两个驱动器和两个接收器
- ±30V 输入电平
- 低电源电流：8mA（典型值）
- ESD 保护性能超过 JESD 22 规范要求
  - 2000V 人体放电模型 (A114-A)
- MAX202 器件可提供采用改良型 ESD (15kV HBM) 和 0.1μF 电荷泵电容器的升级

2 应用

- TIA/EIA-232-F
- 电池供电型系统
- 端子
- 调制解调器
- 计算机

3 说明

MAX232 器件是一款双路驱动器/接收器，其中包括一个电容式电压发生器，可通过单个 5V 电源提供 TIA/EIA-232-F 电压电平。每个接收器都将 TIA/EIA-232-F 输入转换为 5V TTL/CMOS 电平。这些接收器的典型阈值为 1.3V，典型迟滞为 0.5V，可接受 ±30V 输入。每个驱动器都将 TTL/CMOS 输入电平转换为 TIA/EIA-232-F 电平。

封装信息

器件型号	封装(1)	封装尺寸(2)
MAX232	SOIC (16)	9.9mm x 6mm
	SOIC (16)	10.4mm x 10.3mm
	PDIP (16)	19.3mm x 9mm
	SOP (16)	10.2mm x 7.8mm

(1) 有关更多信息，请参阅节 11。
(2) 封装尺寸（长 × 宽）为标称值，并包括引脚（如适用）。

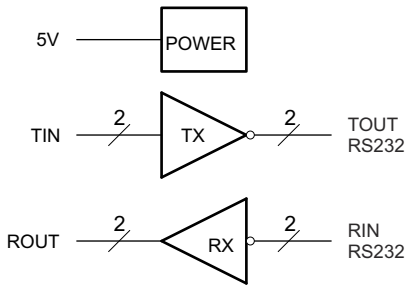

简化原理图

本资源的原文使用英文撰写。 为方便起见，TI 提供了译文；由于翻译过程中可能使用了自动化工具，TI 不保证译文的准确性。 为确认准确性，请务必访问 ti.com 参考最新的英文版本（控制文档）。

Table of Contents

1 特性 1
2 应用 1
3 说明 1
4 Pin Configuration and Functions 3
5 Specifications 4
5.1 Absolute Maximum Ratings[(1)] 4
5.2 ESD Ratings 4
5.3 Recommended Operating Conditions 4
5.4 Thermal Information 4
5.5 Electrical Characteristics, Device 5
5.6 Electrical Characteristics, Driver 5
5.7 Electrical Characteristics, Receiver 5
5.8 Switching Characteristics 5
5.9 Typical Characteristics 6
6 Parameter Measurement Information 7
7 Detailed Description 9
7.1 Overview 9
7.2 Functional Block Diagram 9
7.3 Feature Description 9
7.4 Device Functional Modes 9
8 Application and Implementation 10
8.1 Application Information 10
8.2 Typical Application 10
8.3 Power Supply Recommendations 11
8.4 Layout 11
9 Device and Documentation Support 12
9.1 Receiving Notification of Documentation Updates 12
9.2 支持资源 12
9.3 Trademarks 12
9.4 静电放电警告 12
9.5 术语表 12
10 Revision History 12
11 Mechanical, Packaging, and Orderable Information 12

Copyright © 2024 Texas Instruments Incorporated

4 Pin Configuration and Functions

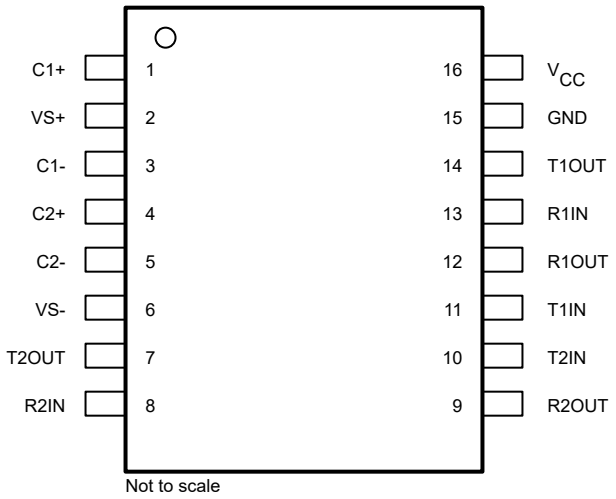

图 4-1. MAX232: D, DW, N or NS Package
MAX232I: D, DW, or N Package
(Top View)

表 4-1. Pin Functions

PIN		TYPE	DESCRIPTION
NAME	NO.		
C1+	1	—	Positive lead of C1 capacitor
VS+	2	O	Positive charge pump output for storage capacitor only
C1-	3	—	Negative lead of C1 capacitor
C2+	4	—	Positive lead of C2 capacitor
C2-	5	—	Negative lead of C2 capacitor
VS-	6	O	Negative charge pump output for storage capacitor only
T2OUT	7	O	RS232 line data output (to remote RS232 system)
R2IN	8	I	RS232 line data input (from remote RS232 system)
R2OUT	9	O	Logic data output (to UART)
T2IN	10	I	Logic data input (from UART)
T1IN	11	I	Logic data input (from UART)
R1IN	13	I	RS232 line data input (from remote RS232 system)
T1OUT	14	O	RS232 line data output (to remote RS232 system)
GND	15	—	Ground
V_{CC}	16	—	Supply Voltage, Connect to external 5V power supply

Copyright © 2024 Texas Instruments Incorporated

5 Specifications

5.1 Absolute Maximum Ratings[1]

over operating free-air temperature range (unless otherwise noted)

			MIN	MAX	UNIT
V_{CC}	Input Supply voltage range[2]		–0.3	6	V
V_{S+}	Positive output supply voltage range		V_{CC} – 0.3	15	V
V_{S-}	Negative output supply voltage range		–0.3	–15	V
V_I	Input voltage range	T1IN, T2IN	–0.3	V_{CC} + 0.3	V
		R1IN, R2IN		±30	
V_O	Output voltage range	T1OUT, T2OUT	V_{S-} – 0.3	V_{S+} + 0.3	V
		R1OUT, R2OUT	–0.3	V_{CC} + 0.3	
	Short-circuit duration	T1OUT, T2OUT	Unlimited		
T_J	Operating virtual junction temperature			150	°C

(1) Stresses beyond those listed under *Absolute Maximum Ratings* may cause permanent damage to the device. These are stress ratings only, and functional operation of the device at these or any other conditions beyond those indicated under *Recommended Operating Conditions* is not implied. Exposure to absolute-maximum-rated conditions for extended periods may affect device reliability.
(2) All voltages are with respect to network GND.

5.2 ESD Ratings

			MIN	MAX	UNIT
T_{stg}	Storage temperature range		-65	150	°C
$V_{(ESD)}$	Electrostatic discharge	Human body model (HBM), per ANSI/ESDA/JEDEC JS-001, all pins[1]	0	2000	V
		Charged device model (CDM), per JEDEC specification JESD22-C101, all pins[2]	0	1000	

(1) JEDEC document JEP155 states that 500-V HBM allows safe manufacturing with a standard ESD control process.
(2) JEDEC document JEP157 states that 250-V CDM allows safe manufacturing with a standard ESD control process.

5.3 Recommended Operating Conditions

			MIN	NOM	MAX	UNIT
V_{CC}	Supply voltage		4.5	5	5.5	V
V_{IH}	High-level input voltage (T1IN,T2IN)		2			V
V_{IL}	Low-level input voltage (T1IN, T2IN)				0.8	V
R1IN, R2IN	Receiver input voltage				±30	V
T_A	Operating free-air temperature	MAX232	0		70	°C
		MAX232I	–40		85	

5.4 Thermal Information

THERMAL METRIC[1]		SOIC (D)	SOIC wide (DW)	PDIP (N)	SOP (NS)	UNIT
		16 PINS	16 PINS	16 PINS	16 PINS	
$R_{\theta JA}$	Junction-to-ambient thermal resistance	84.6	71.7	60.6	88.5	°C/W
$R_{\theta JC(top)}$	Junction-to-case (top) thermal resistance	43.5	37.6	48.1	46.2	°C/W
$R_{\theta JB}$	Junction-to-board thermal resistance	43.2	36.8	40.6	50.7	°C/W
ψ_{JT}	Junction-to-top characterization parameter	10.4	13.3	27.5	13.5	°C/W

Copyright © 2024 Texas Instruments Incorporated

5.4 Thermal Information（续）

THERMAL METRIC[1]		SOIC (D)	SOIC wide (DW)	PDIP (N)	SOP (NS)	UNIT
		16 PINS	16 PINS	16 PINS	16 PINS	
ψ_{JB}	Junction-to-board characterization parameter	42.8	36.4	40.3	50.3	°C/W

(1) For more information about traditional and new thermal metrics, see the *IC Package Thermal Metrics* application report (SPRA953).

5.5 Electrical Characteristics, Device

over recommended ranges of supply voltage and operating free-air temperature (unless otherwise noted) (see 图 8-1)

PARAMETER		TEST CONDITIONS[2]	MIN	TYP[1]	MAX	UNIT
I_{CC}	Supply current	V_{CC} = 5.5V, all outputs open, T_A = 25°C		8	10	mA

(1) All typical values are at V_{CC} = 5V, and T_A = 25°C.
(2) Test conditions are C1 – C4 = 1 μF at V_{CC} = 5V ± 0.5V

5.6 Electrical Characteristics, Driver

over recommended ranges of supply voltage and operating free-air temperature (unless otherwise noted)

PARAMETER			TEST CONDITIONS[2]	MIN	TYP[1]	MAX	UNIT
V_{OH}	High-level output voltage	T1OUT, T2OUT	R_L = 3kΩ to GND	5	7		V
V_{OL}	Low-level output voltage[2]	T1OUT, T2OUT	R_L = 3kΩ to GND		–7	–5	V
r_O	Output resistance	T1OUT, T2OUT	V_{S+} = V_{S-} = 0, V_O = ±2V	300			Ω
I_{OS} [3]	Short-circuit output current	T1OUT, T2OUT	V_{CC} = 5.5V, V_O = 0V		±10		mA
I_{IS}	Short-circuit input current	T1IN, T2IN	V_I = 0			200	μA

(1) All typical values are at V_{CC} = 5V, T_A = 25°C.
(2) The algebraic convention, in which the least-positive (most negative) value is designated minimum, is used in this data sheet for logic voltage levels only.
(3) Not more than one output should be shorted at a time.

5.7 Electrical Characteristics, Receiver

over recommended ranges of supply voltage and operating free-air temperature (unless otherwise noted)

PARAMETER			TEST CONDITIONS[3]	MIN	TYP[1]	MAX	UNIT
V_{OH}	High-level output voltage	R1OUT, R2OUT	I_{OH} = –1mA	3.5			V
V_{OL}	Low-level output voltage[2]	R1OUT, R2OUT	I_{OL} = 3.2mA			0.4	V
V_{IT+}	Receiver positive-going input threshold voltage	R1IN, R2IN	V_{CC} = 5V, T_A = 25°C		1.7	2.4	V
V_{IT-}	Receiver negative-going input threshold voltage	R1IN, R2IN	V_{CC} = 5V, T_A = 25°C	0.8	1.2		V
V_{hys}	Input hysteresis voltage	R1IN, R2IN	V_{CC} = 5V	0.2	0.5	1	V
r_I	Receiver input resistance	R1IN, R2IN	V_{CC} = 5V, T_A = 25°C	3	5	7	kΩ

(1) All typical values are at V_{CC} = 5V, T_A = 25°C.
(2) The algebraic convention, in which the least-positive (most negative) value is designated minimum, is used in this data sheet for logic voltage levels only.
(3) Test conditions are C1 – C4 = 1 μF at V_{CC} = 5V ± 0.5V.

5.8 Switching Characteristics

over recommended ranges of supply voltage and operating free-air temperature (unless otherwise noted)

PARAMETER		TEST CONDITIONS[1]	MIN	TYP[1]	MAX	UNIT
SR	Driver slew rate	RL = 3kΩ to 7kΩ, see 图 6-2			30	V/μs
SR(t)	Driver transition region slew rate	see 图 6-3		3		V/μs
	Data rate	One TOUT switching		120		kbit/s

5.8 Switching Characteristics（续）

over recommended ranges of supply voltage and operating free-air temperature (unless otherwise noted)

PARAMETER		TEST CONDITIONS[1]	MIN	TYP[1]	MAX	UNIT
$t_{PLH®)}$	Receiver propagation delay time, low- to high-level output	TTL load, see 图 6-1		500		ns
$t_{PHL®)}$	Receiver propagation delay time, high- to low-level output	TTL load, see 图 6-1		500		ns

(1) Test conditions are C1 – C4 = 1 μF at V_{CC} = 5V ± 0.5V.

5.9 Typical Characteristics

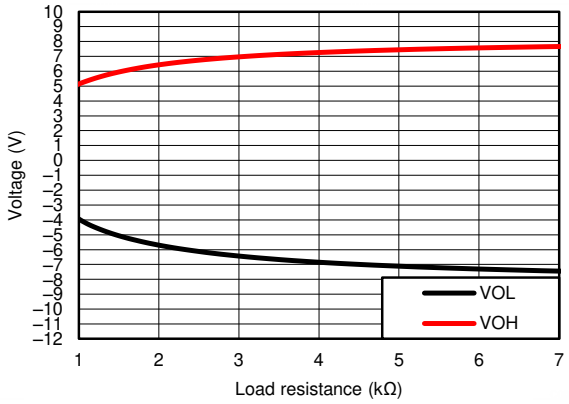

图 5-1. TOUT VOH & VOL vs Load Resistance, Both Drivers Loaded

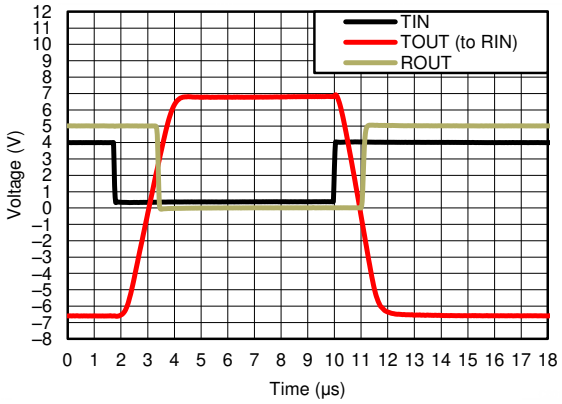

图 5-2. Driver to Receiver Loopback Timing Waveform

Copyright © 2024 Texas Instruments Incorporated

6 Parameter Measurement Information

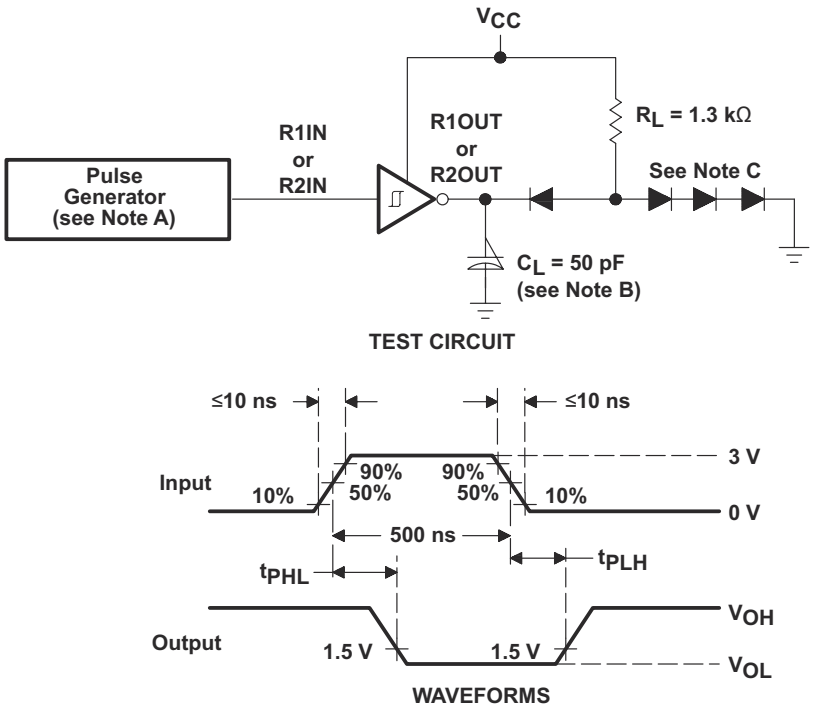

A. The pulse generator has the following characteristics: Z_O = 50 Ω, duty cycle ≤ 50%.
B. C_L includes probe and jig capacitance.
C. All diodes are 1N3064 or equivalent.

图 6-1. Receiver Test Circuit and Waveforms for t_{PHL} and t_{PLH} Measurements

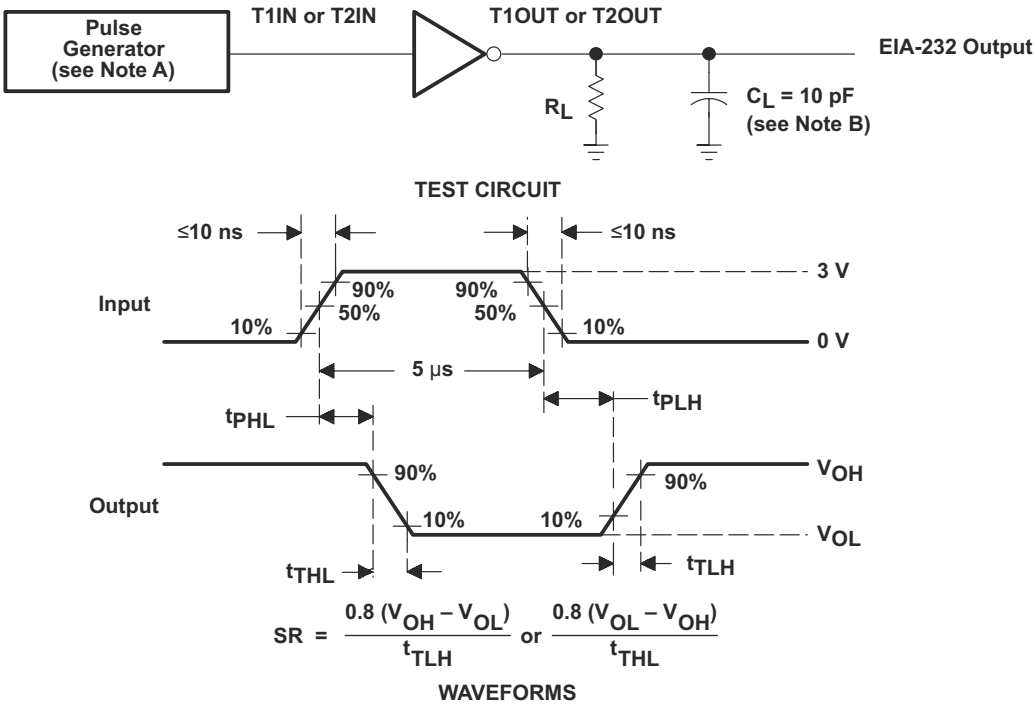

A. The pulse generator has the following characteristics: Z_O = 50 Ω, duty cycle ≤ 50%.

B. C_L includes probe and jig capacitance.

图 6-2. Driver Test Circuit and Waveforms for t_{PHL} and t_{PLH} Measurements (5 µs Input)

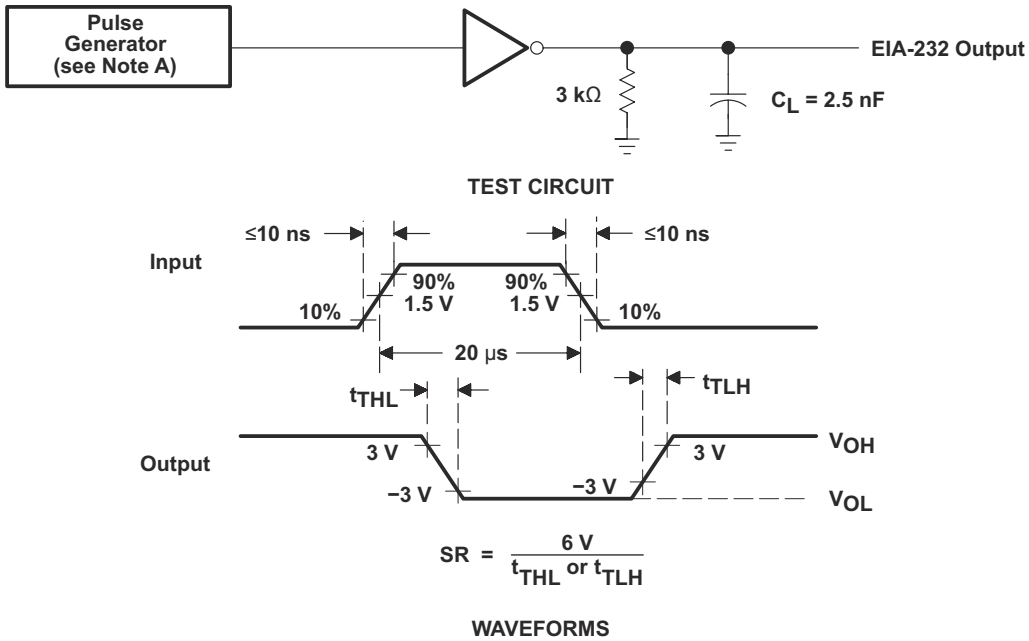

A. The pulse generator has the following characteristics: Z_O = 50 Ω, duty cycle ≤ 50%.

图 6-3. Test Circuit and Waveforms for t_{THL} and t_{TLH} Measurements (20 µs Input)

Copyright © 2024 Texas Instruments Incorporated

7 Detailed Description

7.1 Overview

The MAX232 device is a dual driver/receiver that includes a capacitive voltage generator using four capacitors to supply TIA/EIA-232-F voltage levels from a single 5-V supply. Each receiver converts TIA/EIA-232-F inputs to 5-V TTL/CMOS levels. These receivers have a typical threshold of 1.3 V, a typical hysteresis of 0.5 V, and can accept ±30-V inputs. Each driver converts TTL/CMOS input levels into TIA/EIA-232-F levels. The driver, receiver, and voltage-generator functions are available as cells in the Texas Instruments LinASIC™ library. Outputs are protected against shorts to ground.

7.2 Functional Block Diagram

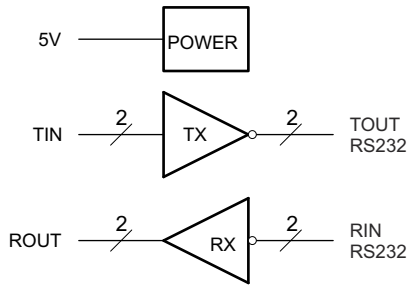

7.3 Feature Description

7.3.1 Power

The power block increases and inverts the 5V supply for the RS232 driver using a charge pump that requires four 1µF external capacitors.

7.3.2 RS232 Driver

Two drivers interface standard logic level to RS232 levels. Internal pull up resistors on TIN inputs ensures a high input when the line is high impedance.

7.3.3 RS232 Receiver

Two receivers interface RS232 levels to standard logic levels. An open input will result in a high output on ROUT.

7.4 Device Functional Modes

7.4.1 V_{CC} powered by 5V

The device will be in normal operation.

7.4.2 V_{CC} unpowered

When MAX232 is unpowered, it can be safely connected to an active remote RS232 device.

7.4.3 Function Tables

表 7-1. Each Driver

INPUT[(1)]	OUTPUT
T_{IN}	T_{OUT}
L	H
H	L

(1) H = high level, L = low level, X = irrelevant, Z = high impedance

表 7-2. Each Receiver

INPUTS(1)	OUTPUT
R_{IN}	R_{OUT}
L	H
H	L
Open	H

(1) H = high level, L = low level, X = irrelevant, Z = high impedance (off), Open = disconnected input or connected driver off

8 Application and Implementation

备注

以下应用部分中的信息不属于 TI 器件规格的范围，TI 不担保其准确性和完整性。TI 的客 户应负责确定器件是否适用于其应用。客户应验证并测试其设计，以确保系统功能。

8.1 Application Information

For proper operation add capacitors as shown in 图 8-1. Pins 9 through 12 connect to UART or general purpose logic lines. EIA-232 lines will connect to a connector or cable.

8.2 Typical Application

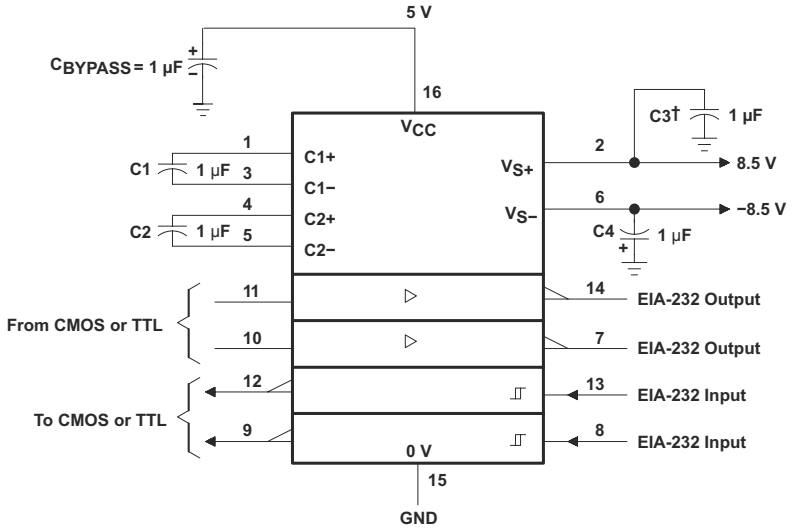

† C3 can be connected to V_{CC} or GND.
NOTES: A. Resistor values shown are nominal.
B. Nonpolarized ceramic capacitors are acceptable. If polarized tantalum or electrolytic capacitors are used, they should be connected as shown. In addition to the 1-µF capacitors shown, the MAX202 can operate with 0.1-µF capacitors.

图 8-1. Typical Operating Circuit

8.2.1 Design Requirements

- V_{CC} minimum is 4.5V and maximum is 5.5V.
- Maximum recommended bit rate is 120kbps.

8.2.2 Detailed Design Procedure

Use 1uF tantalum or ceramic capacitors.

Copyright © 2024 Texas Instruments Incorporated

8.2.3 Application Curves

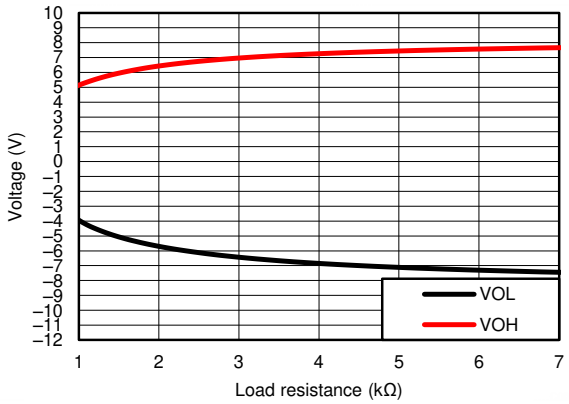

图 8-2. TOUT VOH & VOL vs Load Resistance, Both Drivers Loaded

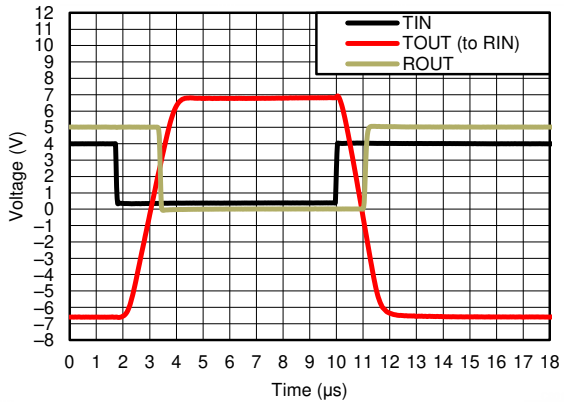

图 8-3. Driver to Receiver Loopback Timing Waveform

8.3 Power Supply Recommendations

The V_{CC} voltage should be connected to the same power source used for logic device connected to TIN pins. V_{CC} should be between 4.5V and 5.5V.

8.4 Layout

8.4.1 Layout Guidelines

Keep the external capacitor traces short. This is more important on C1 and C2 nodes that have the fastest rise and fall times.

8.4.2 Layout Example

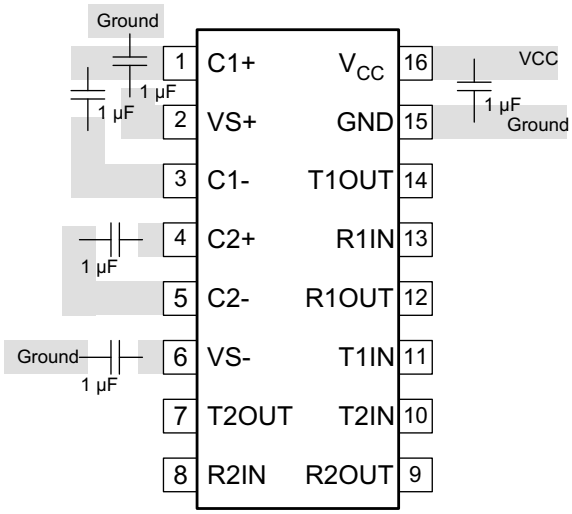

图 8-4. Layout Schematic

9 Device and Documentation Support

9.1 Receiving Notification of Documentation Updates

To receive notification of documentation updates, navigate to the device product folder on ti.com. In the upper right corner, click on *Alert me* to register and receive a weekly digest of any product information that has changed. For change details, review the revision history included in any revised document.

9.2 支持资源

TI E2E™ 中文支持论坛是工程师的重要参考资料，可直接从专家处获得快速、经过验证的解答和设计帮助。搜索现有解答或提出自己的问题，获得所需的快速设计帮助。

链接的内容由各个贡献者“按原样”提供。这些内容并不构成 TI 技术规范，并且不一定反映 TI 的观点；请参阅 TI 的使用条款。

9.3 Trademarks

TI E2E™ is a trademark of Texas Instruments.
所有商标均为其各自所有者的财产。

9.4 静电放电警告

静电放电 (ESD) 会损坏这个集成电路。德州仪器 (TI) 建议通过适当的预防措施处理所有集成电路。如果不遵守正确的处理和安装程序，可能会损坏集成电路。

ESD 的损坏小至导致微小的性能降级，大至整个器件故障。精密的集成电路可能更容易受到损坏，这是因为非常细微的参数更改都可能会导致器件与其发布的规格不相符。

9.5 术语表

TI 术语表	本术语表列出并解释了术语、首字母缩略词和定义。

10 Revision History

Changes from Revision M (November 2004) to Revision N (February 2024)	Page
• Changed the Handling Ratings table to the *ESD Ratings* table	4
• Changed the *Thermal Information* table	4

Changes from Revision L (March 2004) to Revision M (November 2014)	Page
• 删除了“订购信息”表	1
• 添加了“处理额定值”表、“特性说明”部分、器件功能模式、“应用和实施”部分、“电源相关建议”部分、“布局”部分、“器件和文档支持”部分以及“机械、封装和可订购信息”部分。	1
• 将“器件信息”表更改为*封装信息* 表	1
• Moved T_{stg} to Handling Ratings table	4

11 Mechanical, Packaging, and Orderable Information

The following pages include mechanical packaging and orderable information. This information is the most current data available for the designated devices. This data is subject to change without notice and revision of this document. For browser based versions of this data sheet, refer to the left hand navigation.

Copyright © 2024 Texas Instruments Incorporated

PACKAGING INFORMATION

Orderable Device	Status (1)	Package Type	Package Drawing	Pins	Package Qty	Eco Plan (2)	Lead finish/ Ball material (6)	MSL Peak Temp (3)	Op Temp (°C)	Device Marking (4/5)	Samples
MAX232D	OBSOLETE	SOIC	D	16		TBD	Call TI	Call TI	0 to 70	MAX232	
MAX232DR	ACTIVE	SOIC	D	16	2500	RoHS & Green	NIPDAU | SN	Level-1-260C-UNLIM	0 to 70	MAX232	Samples
MAX232DRG4	OBSOLETE	SOIC	D	16		TBD	Call TI	Call TI	0 to 70	MAX232	
MAX232DW	OBSOLETE	SOIC	DW	16		TBD	Call TI	Call TI	0 to 70	MAX232	
MAX232DWG4	OBSOLETE	SOIC	DW	16		TBD	Call TI	Call TI	0 to 70	MAX232	
MAX232DWR	OBSOLETE	SOIC	DW	16		TBD	Call TI	Call TI	0 to 70	MAX232	
MAX232DWRG4	OBSOLETE	SOIC	DW	16		TBD	Call TI	Call TI	0 to 70	MAX232	
MAX232ID	OBSOLETE	SOIC	D	16		TBD	Call TI	Call TI	-40 to 85	MAX232I	
MAX232IDR	ACTIVE	SOIC	D	16	2500	RoHS & Green	NIPDAU	Level-1-260C-UNLIM	-40 to 85	MAX232I	Samples
MAX232IDW	OBSOLETE	SOIC	DW	16		TBD	Call TI	Call TI	-40 to 85	MAX232I	
MAX232IDWR	ACTIVE	SOIC	DW	16	2000	RoHS & Green	NIPDAU	Level-1-260C-UNLIM	-40 to 85	MAX232I	Samples
MAX232IDWRG4	OBSOLETE	SOIC	DW	16		TBD	Call TI	Call TI	-40 to 85	MAX232I	
MAX232IN	OBSOLETE	PDIP	N	16		TBD	Call TI	Call TI	-40 to 85	MAX232IN	
MAX232N	ACTIVE	PDIP	N	16	25	RoHS & Green	NIPDAU	N / A for Pkg Type	0 to 70	MAX232N	Samples
MAX232NE4	ACTIVE	PDIP	N	16	25	RoHS & Green	NIPDAU	N / A for Pkg Type	0 to 70	MAX232N	Samples
MAX232NSR	ACTIVE	SO	NS	16	2000	RoHS & Green	NIPDAU	Level-1-260C-UNLIM	0 to 70	MAX232	Samples

(1) The marketing status values are defined as follows:
ACTIVE: Product device recommended for new designs.
LIFEBUY: TI has announced that the device will be discontinued, and a lifetime-buy period is in effect.
NRND: Not recommended for new designs. Device is in production to support existing customers, but TI does not recommend using this part in a new design.
PREVIEW: Device has been announced but is not in production. Samples may or may not be available.
OBSOLETE: TI has discontinued the production of the device.

(2) **RoHS:** TI defines "RoHS" to mean semiconductor products that are compliant with the current EU RoHS requirements for all 10 RoHS substances, including the requirement that RoHS substance do not exceed 0.1% by weight in homogeneous materials. Where designed to be soldered at high temperatures, "RoHS" products are suitable for use in specified lead-free processes. TI may reference these types of products as "Pb-Free".
RoHS Exempt: TI defines "RoHS Exempt" to mean products that contain lead but are compliant with EU RoHS pursuant to a specific EU RoHS exemption.
Green: TI defines "Green" to mean the content of Chlorine (Cl) and Bromine (Br) based flame retardants meet JS709B low halogen requirements of <=1000ppm threshold. Antimony trioxide based flame retardants must also meet the <=1000ppm threshold requirement.

(3) MSL, Peak Temp. - The Moisture Sensitivity Level rating according to the JEDEC industry standard classifications, and peak solder temperature.

(4) There may be additional marking, which relates to the logo, the lot trace code information, or the environmental category on the device.

(5) Multiple Device Markings will be inside parentheses. Only one Device Marking contained in parentheses and separated by a "~" will appear on a device. If a line is indented then it is a continuation of the previous line and the two combined represent the entire Device Marking for that device.

(6) Lead finish/Ball material - Orderable Devices may have multiple material finish options. Finish options are separated by a vertical ruled line. Lead finish/Ball material values may wrap to two lines if the finish value exceeds the maximum column width.

Important Information and Disclaimer: The information provided on this page represents TI's knowledge and belief as of the date that it is provided. TI bases its knowledge and belief on information provided by third parties, and makes no representation or warranty as to the accuracy of such information. Efforts are underway to better integrate information from third parties. TI has taken and continues to take reasonable steps to provide representative and accurate information but may not have conducted destructive testing or chemical analysis on incoming materials and chemicals. TI and TI suppliers consider certain information to be proprietary, and thus CAS numbers and other limited information may not be available for release.

In no event shall TI's liability arising out of such information exceed the total purchase price of the TI part(s) at issue in this document sold by TI to Customer on an annual basis.

TAPE AND REEL INFORMATION

REEL DIMENSIONS

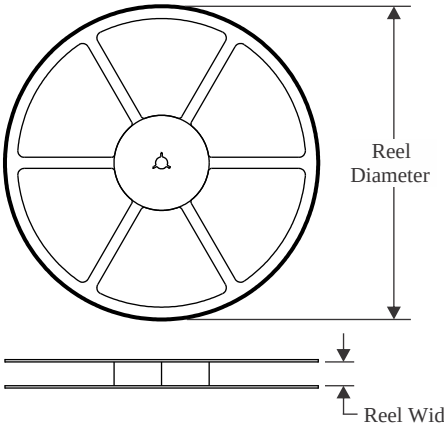

TAPE DIMENSIONS

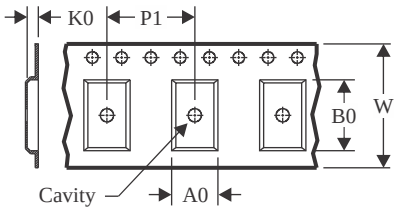

A0	Dimension designed to accommodate the component width
B0	Dimension designed to accommodate the component length
K0	Dimension designed to accommodate the component thickness
W	Overall width of the carrier tape
P1	Pitch between successive cavity centers

QUADRANT ASSIGNMENTS FOR PIN 1 ORIENTATION IN TAPE

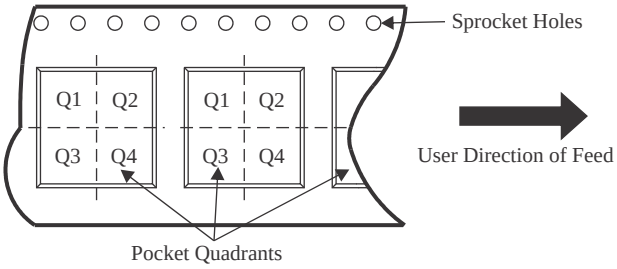

*All dimensions are nominal

Device	Package Type	Package Drawing	Pins	SPQ	Reel Diameter (mm)	Reel Width W1 (mm)	A0 (mm)	B0 (mm)	K0 (mm)	P1 (mm)	W (mm)	Pin1 Quadrant
MAX232DR	SOIC	D	16	2500	330.0	16.4	6.5	10.3	2.1	8.0	16.0	Q1
MAX232DR	SOIC	D	16	2500	330.0	16.4	6.5	10.3	2.1	8.0	16.0	Q1
MAX232DR	SOIC	D	16	2500	330.0	16.4	6.5	10.3	2.1	8.0	16.0	Q1
MAX232IDR	SOIC	D	16	2500	330.0	16.4	6.5	10.3	2.1	8.0	16.0	Q1
MAX232IDR	SOIC	D	16	2500	330.0	16.4	6.5	10.3	2.1	8.0	16.0	Q1
MAX232IDWR	SOIC	DW	16	2000	330.0	16.4	10.75	10.7	2.7	12.0	16.0	Q1
MAX232NSR	SO	NS	16	2000	330.0	16.4	8.2	10.5	2.5	12.0	16.0	Q1
MAX232NSR	SO	NS	16	2000	330.0	16.4	8.2	10.5	2.5	12.0	16.0	Q1

TAPE AND REEL BOX DIMENSIONS

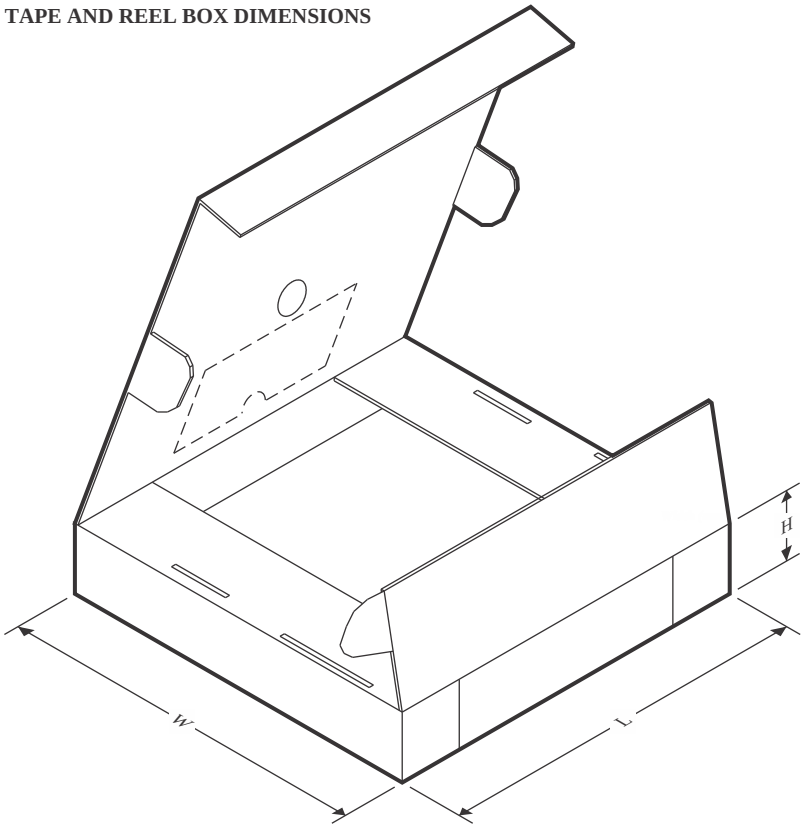

*All dimensions are nominal

Device	Package Type	Package Drawing	Pins	SPQ	Length (mm)	Width (mm)	Height (mm)
MAX232DR	SOIC	D	16	2500	340.5	336.1	32.0
MAX232DR	SOIC	D	16	2500	356.0	356.0	35.0
MAX232DR	SOIC	D	16	2500	333.2	345.9	28.6
MAX232IDR	SOIC	D	16	2500	353.0	353.0	32.0
MAX232IDR	SOIC	D	16	2500	340.5	336.1	32.0
MAX232IDWR	SOIC	DW	16	2000	350.0	350.0	43.0
MAX232NSR	SO	NS	16	2000	367.0	367.0	38.0
MAX232NSR	SO	NS	16	2000	353.0	353.0	32.0

TUBE

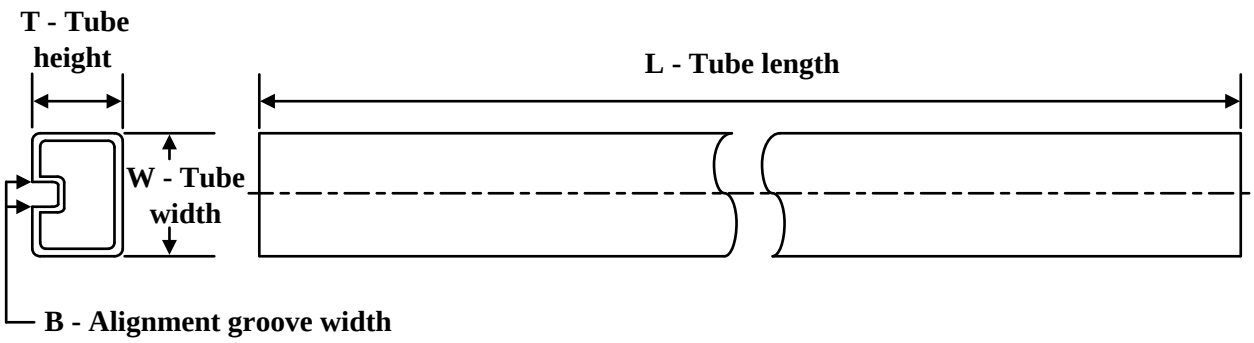

*All dimensions are nominal

Device	Package Name	Package Type	Pins	SPQ	L (mm)	W (mm)	T (µm)	B (mm)
MAX232N	N	PDIP	16	25	506	13.97	11230	4.32
MAX232NE4	N	PDIP	16	25	506	13.97	11230	4.32

D (R–PDSO–G16) PLASTIC SMALL OUTLINE

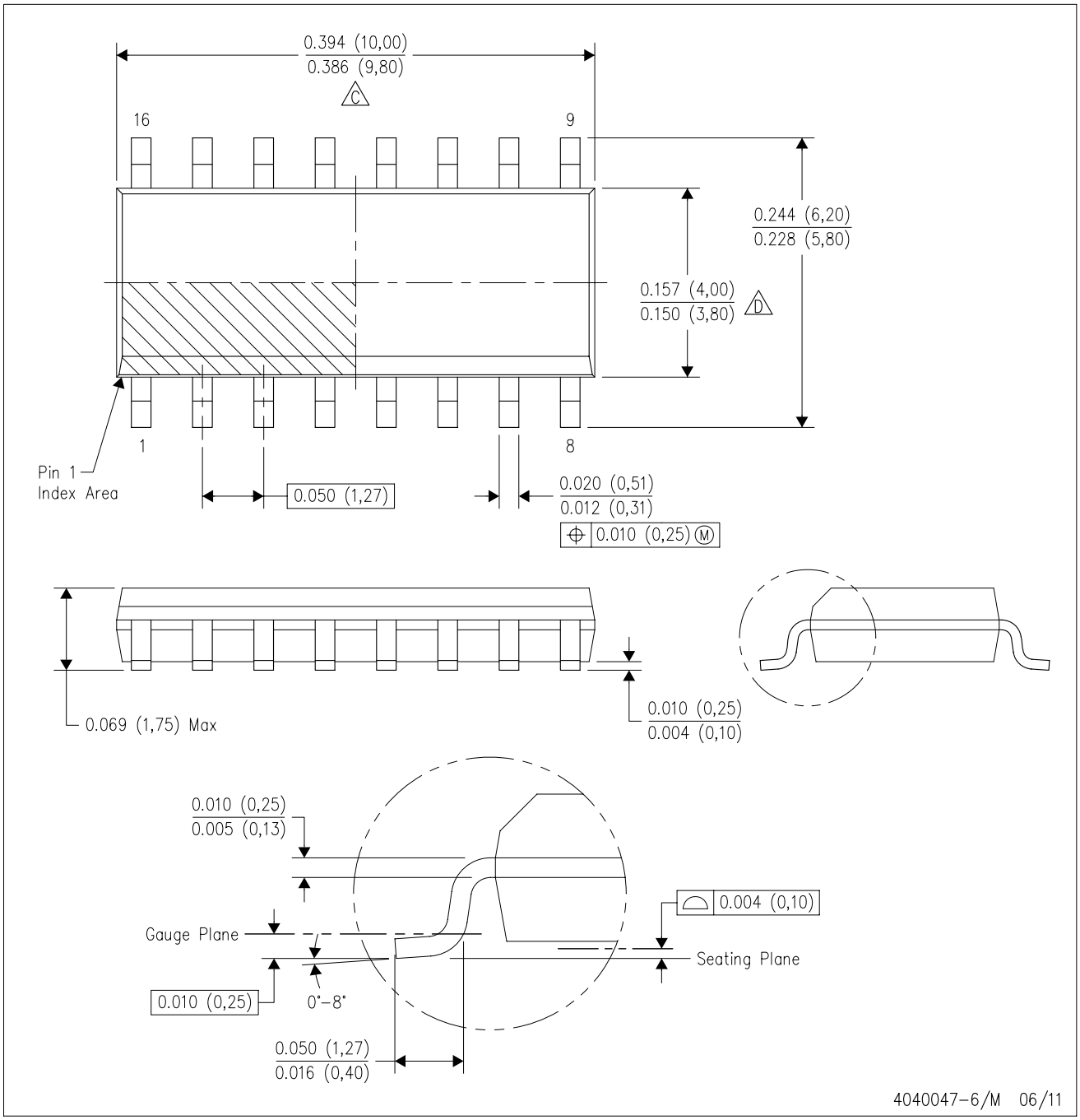

NOTES:
A. All linear dimensions are in inches (millimeters).
B. This drawing is subject to change without notice.
C. Body length does not include mold flash, protrusions, or gate burrs. Mold flash, protrusions, or gate burrs shall not exceed 0.006 (0,15) each side.
D. Body width does not include interlead flash. Interlead flash shall not exceed 0.017 (0,43) each side.
E. Reference JEDEC MS–012 variation AC.

D (R–PDSO–G16) PLASTIC SMALL OUTLINE

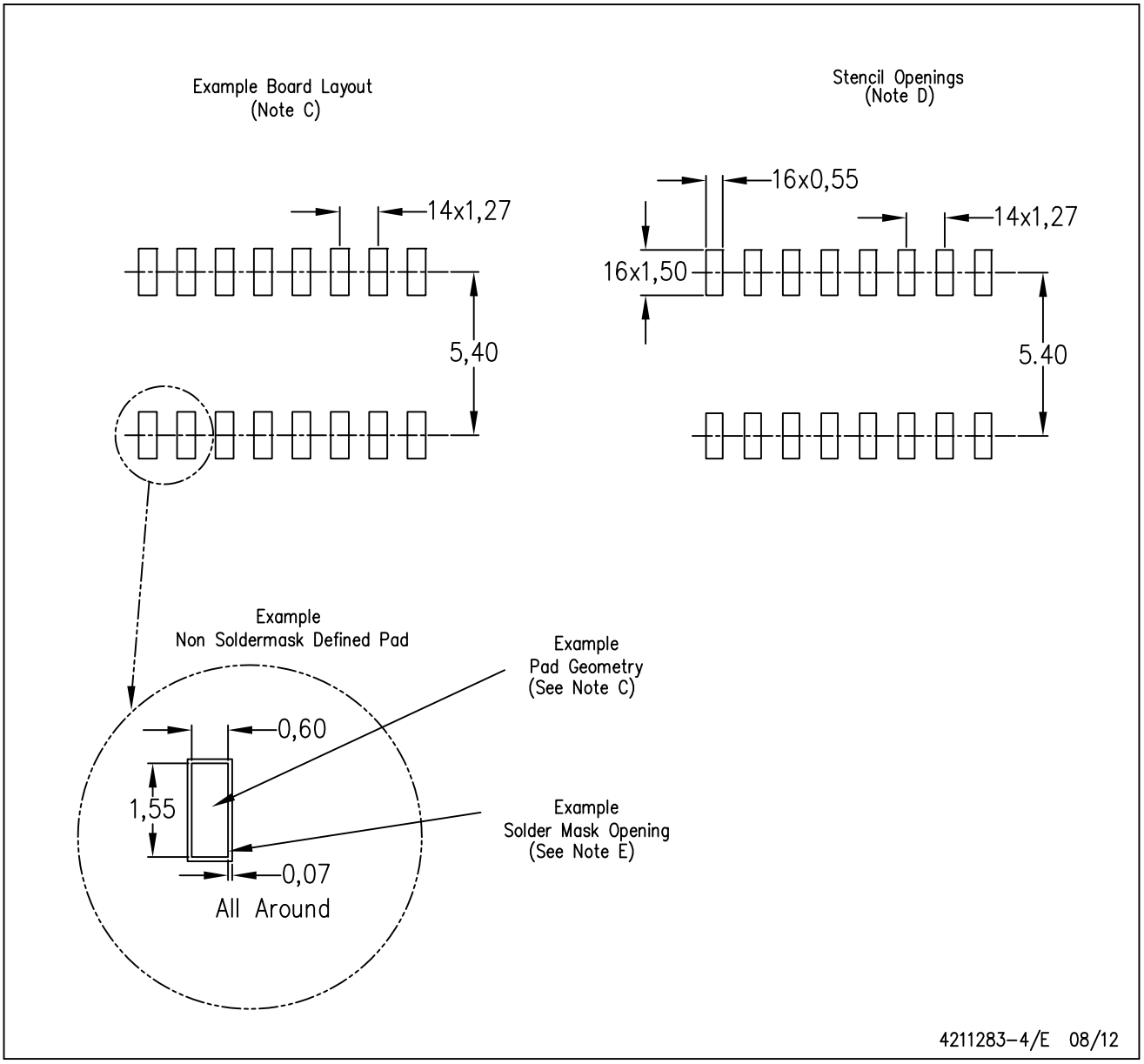

NOTES:
A. All linear dimensions are in millimeters.
B. This drawing is subject to change without notice.
C. Publication IPC–7351 is recommended for alternate designs.
D. Laser cutting apertures with trapezoidal walls and also rounding corners will offer better paste release. Customers should contact their board assembly site for stencil design recommendations. Refer to IPC–7525 for other stencil recommendations.
E. Customers should contact their board fabrication site for solder mask tolerances between and around signal pads.

MECHANICAL DATA

NS (R-PDSO-G)** **PLASTIC SMALL-OUTLINE PACKAGE**

14-PINS SHOWN

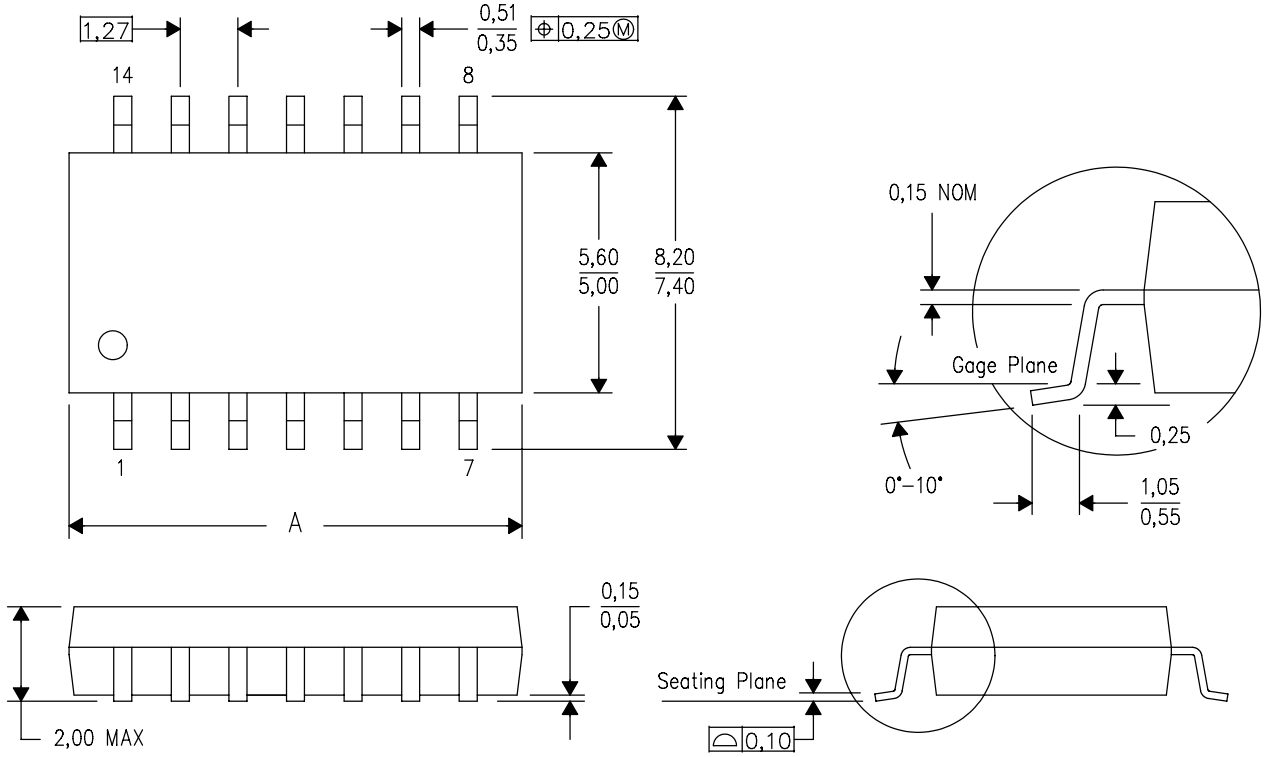

DIM \ PINS **	14	16	20	24
A MAX	10,50	10,50	12,90	15,30
A MIN	9,90	9,90	12,30	14,70

4040062/C 03/03

NOTES:
A. All linear dimensions are in millimeters.
B. This drawing is subject to change without notice.
C. Body dimensions do not include mold flash or protrusion, not to exceed 0,15.

GENERIC PACKAGE VIEW

DW 16

SOIC - 2.65 mm max height

7.5 x 10.3, 1.27 mm pitch

SMALL OUTLINE INTEGRATED CIRCUIT

This image is a representation of the package family, actual package may vary.
Refer to the product data sheet for package details.

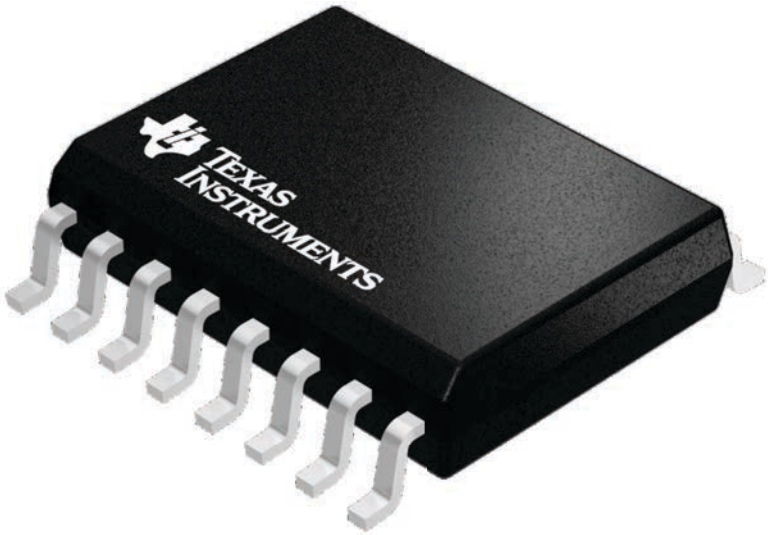

4224780/A

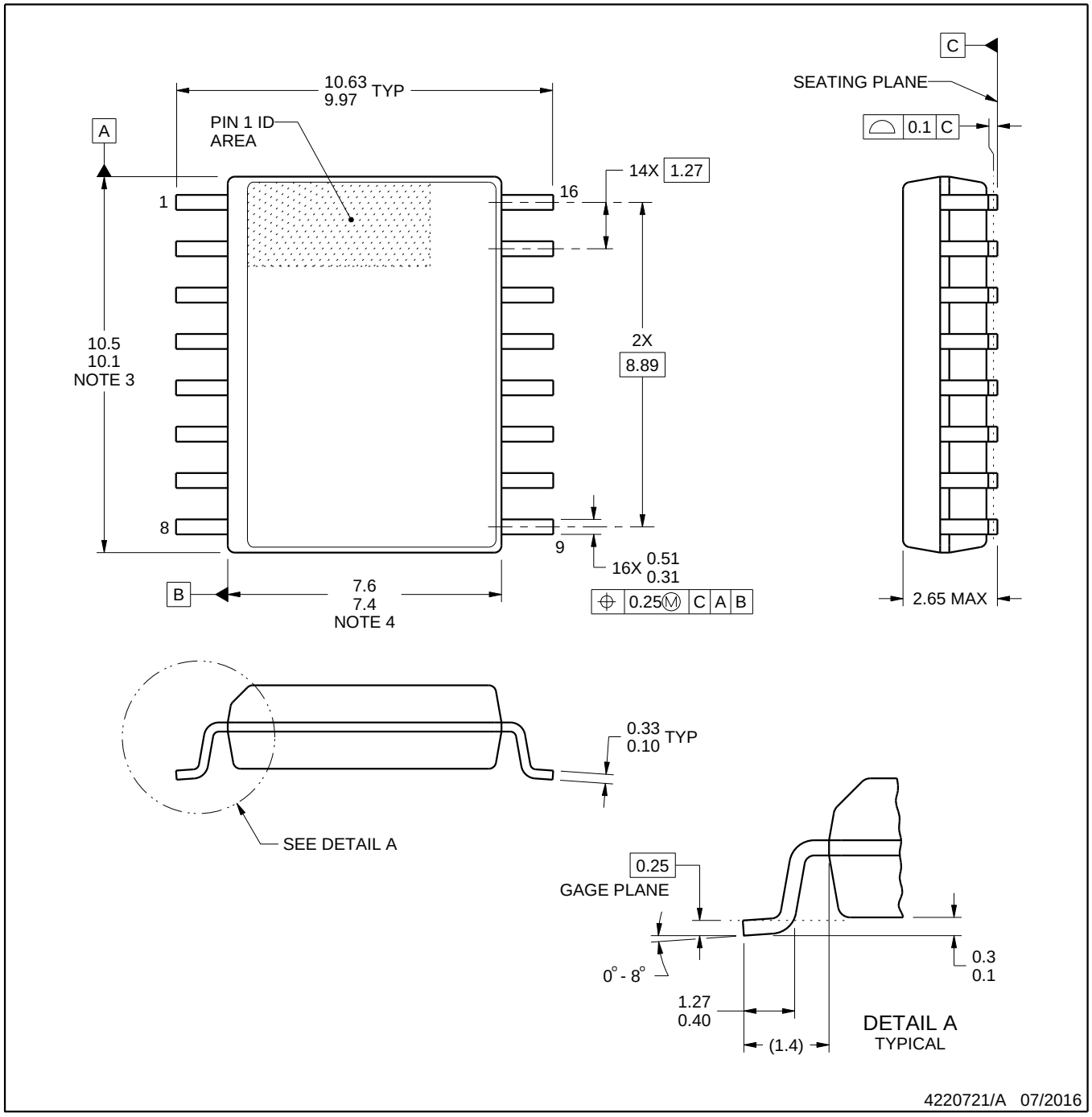

NOTES:

1. All linear dimensions are in millimeters. Dimensions in parenthesis are for reference only. Dimensioning and tolerancing per ASME Y14.5M.
2. This drawing is subject to change without notice.
3. This dimension does not include mold flash, protrusions, or gate burrs. Mold flash, protrusions, or gate burrs shall not exceed 0.15 mm, per side.
4. This dimension does not include interlead flash. Interlead flash shall not exceed 0.25 mm, per side.
5. Reference JEDEC registration MS-013.

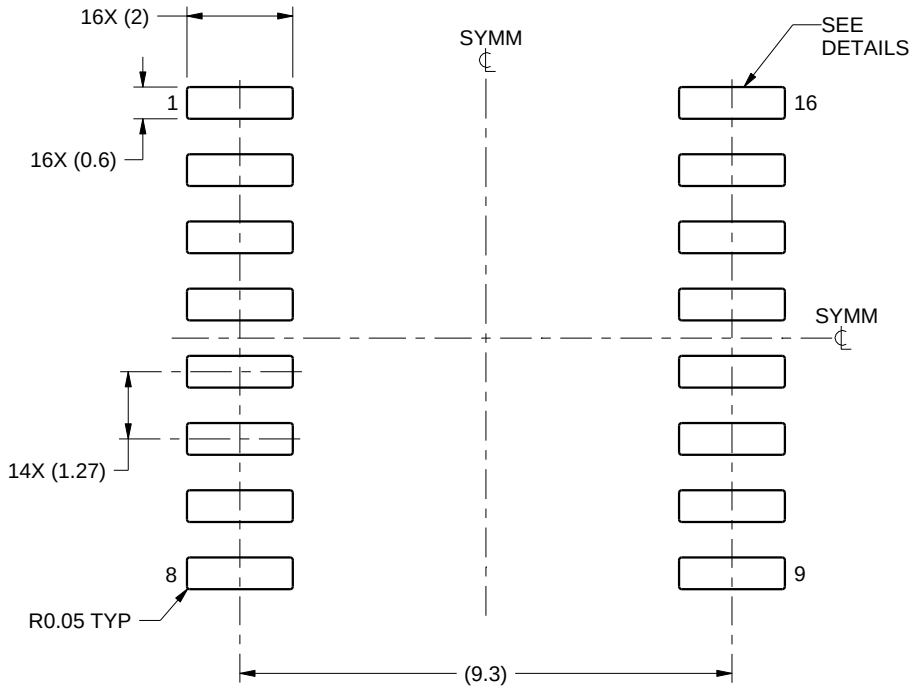

LAND PATTERN EXAMPLE
SCALE:7X

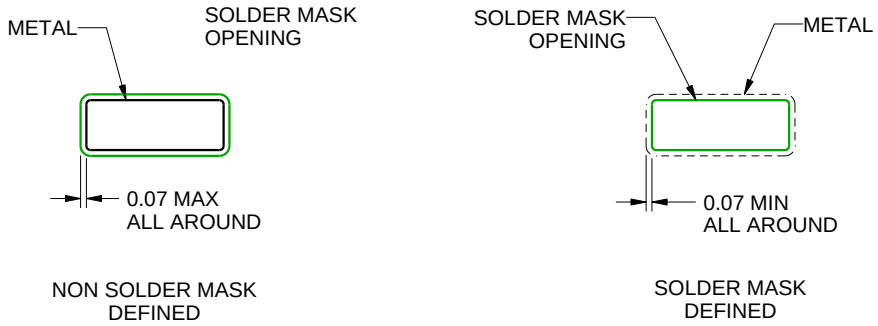

SOLDER MASK DETAILS

4220721/A 07/2016

NOTES: (continued)

6. Publication IPC-7351 may have alternate designs.
7. Solder mask tolerances between and around signal pads can vary based on board fabrication site.

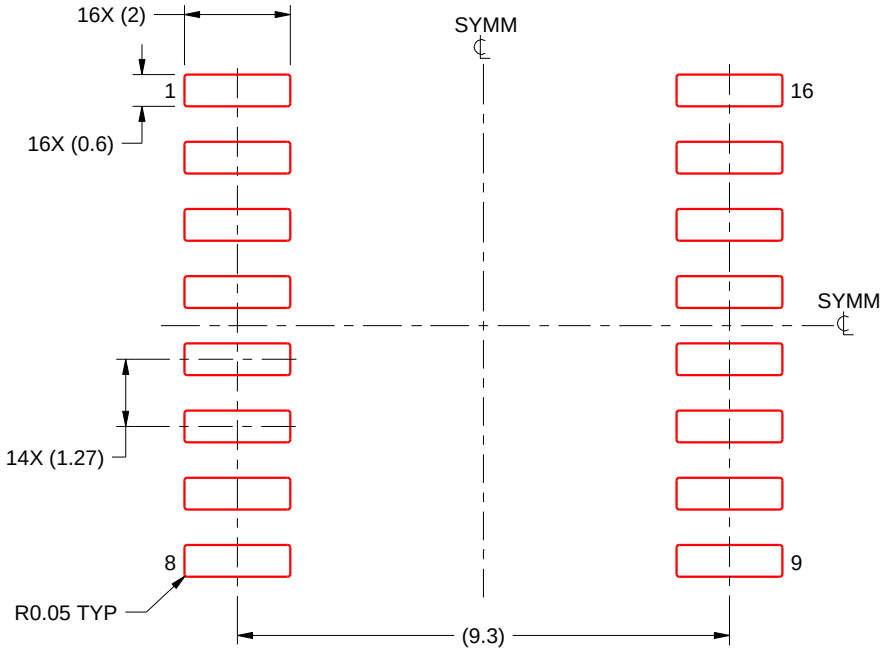

SOLDER PASTE EXAMPLE
BASED ON 0.125 mm THICK STENCIL
SCALE:7X

4220721/A 07/2016

NOTES: (continued)

8. Laser cutting apertures with trapezoidal walls and rounded corners may offer better paste release. IPC-7525 may have alternate design recommendations.
9. Board assembly site may have different recommendations for stencil design.

N (R–PDIP–T**) PLASTIC DUAL–IN–LINE PACKAGE

16 PINS SHOWN

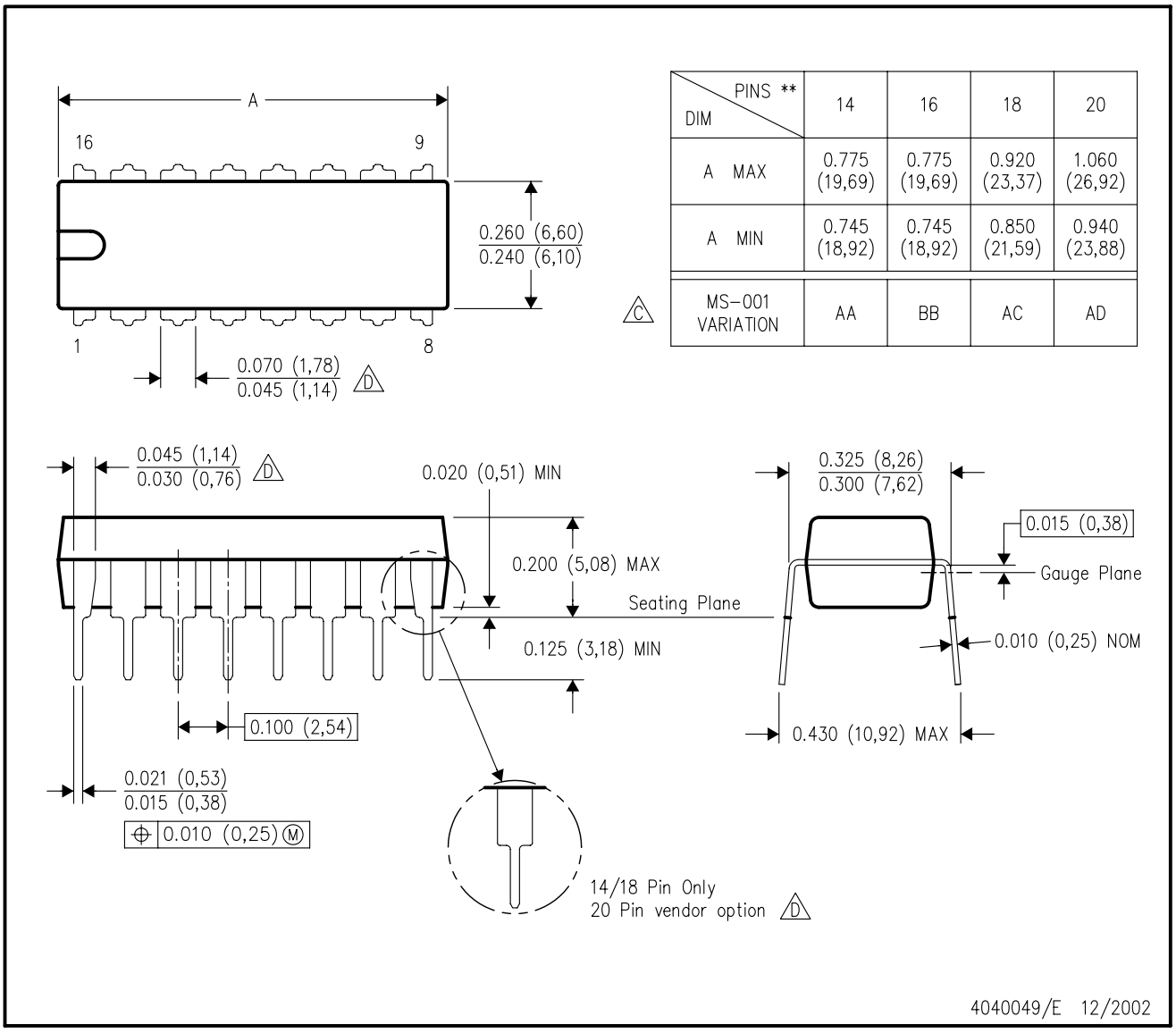

DIM \ PINS **	14	16	18	20
A MAX	0.775 (19,69)	0.775 (19,69)	0.920 (23,37)	1.060 (26,92)
A MIN	0.745 (18,92)	0.745 (18,92)	0.850 (21,59)	0.940 (23,88)
MS–001 VARIATION (C)	AA	BB	AC	AD

NOTES:
A. All linear dimensions are in inches (millimeters).
B. This drawing is subject to change without notice.
C. Falls within JEDEC MS–001, except 18 and 20 pin minimum body length (Dim A).
D. The 20 pin end lead shoulder width is a vendor option, either half or full width.

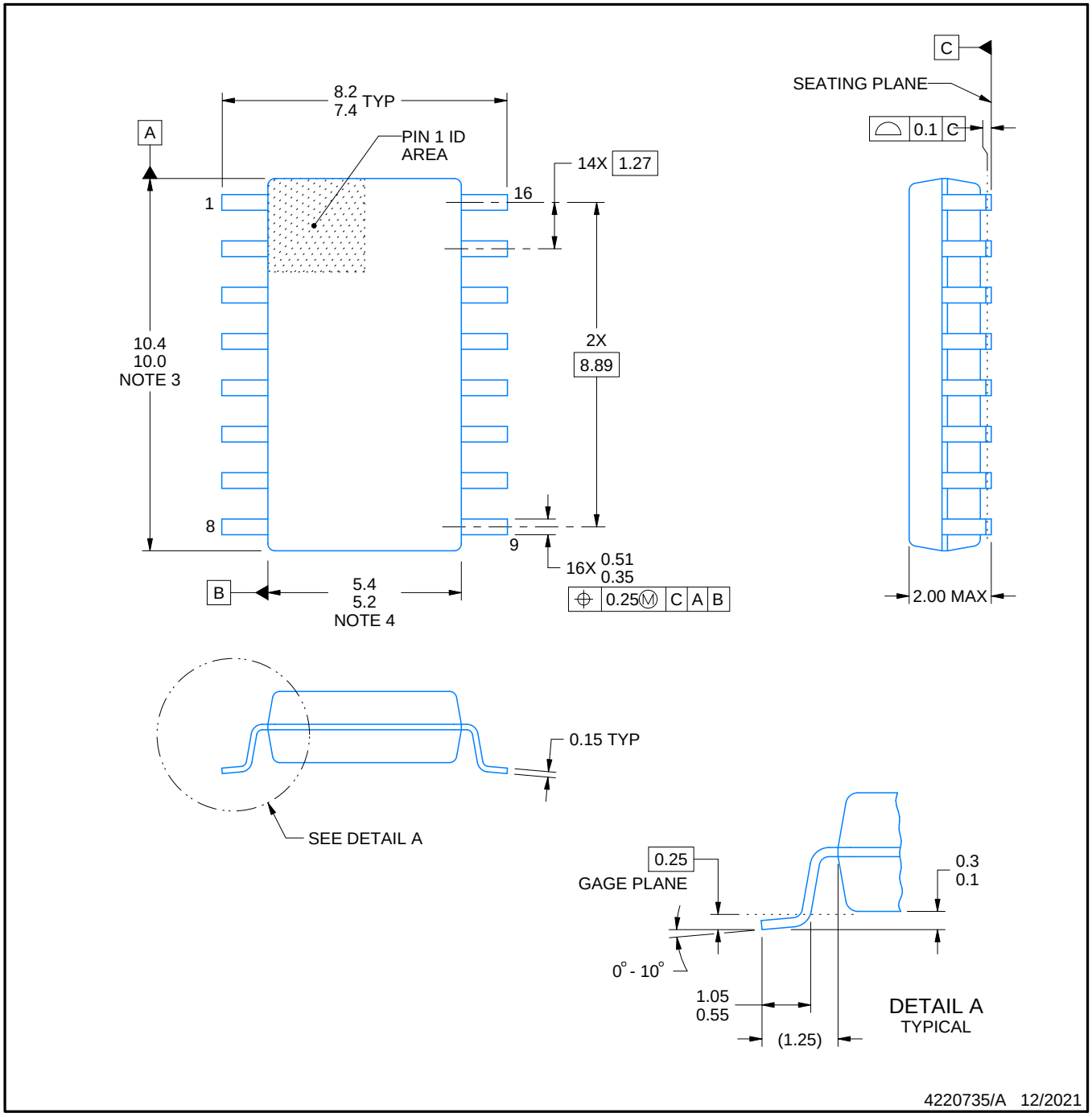

NOTES:

1. All linear dimensions are in millimeters. Dimensions in parenthesis are for reference only. Dimensioning and tolerancing per ASME Y14.5M.
2. This drawing is subject to change without notice.
3. This dimension does not include mold flash, protrusions, or gate burrs. Mold flash, protrusions, or gate burrs shall not exceed 0.15 mm, per side.
4. This dimension does not include interlead flash. Interlead flash shall not exceed 0.25 mm, per side.

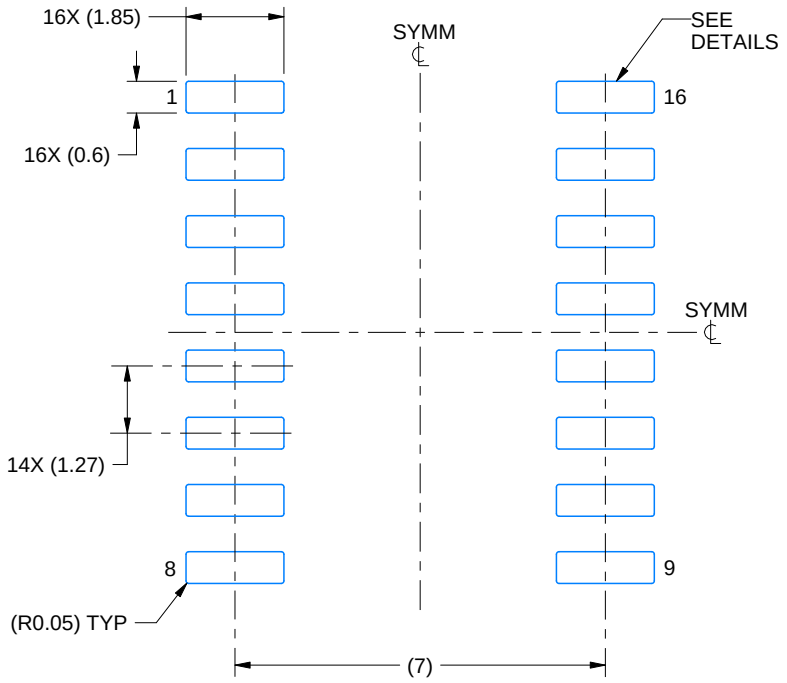

LAND PATTERN EXAMPLE
SCALE:7X

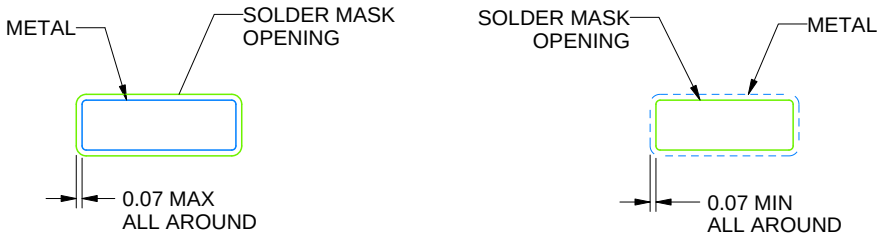

NON SOLDER MASK DEFINED

SOLDER MASK DEFINED

SOLDER MASK DETAILS

4220735/A 12/2021

NOTES: (continued)

5. Publication IPC-7351 may have alternate designs.
6. Solder mask tolerances between and around signal pads can vary based on board fabrication site.

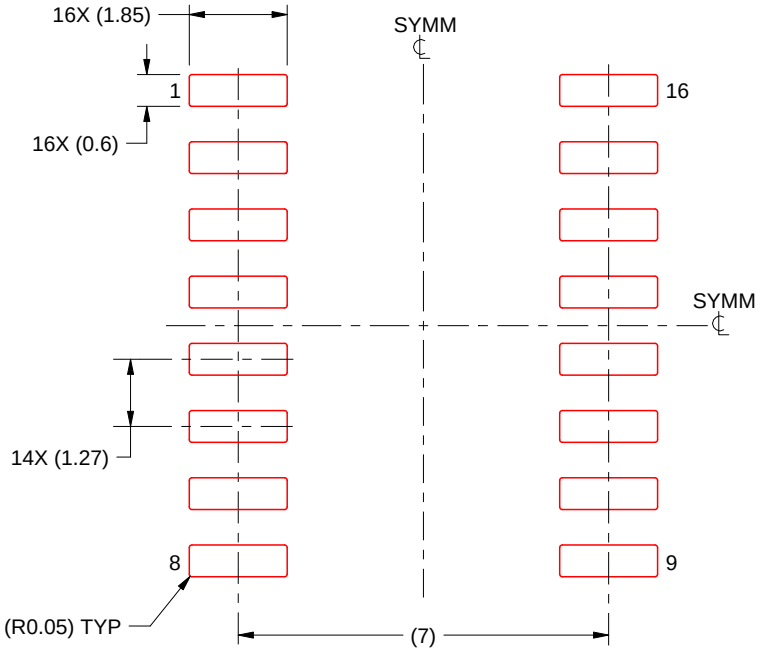

SOLDER PASTE EXAMPLE
BASED ON 0.125 mm THICK STENCIL
SCALE:7X

4220735/A 12/2021

NOTES: (continued)

7. Laser cutting apertures with trapezoidal walls and rounded corners may offer better paste release. IPC-7525 may have alternate design recommendations.
8. Board assembly site may have different recommendations for stencil design.

重要声明和免责声明

TI“按原样”提供技术和可靠性数据（包括数据表）、设计资源（包括参考设计）、应用或其他设计建议、网络工具、安全信息和其他资源，不保证没有瑕疵且不做出任何明示或暗示的担保，包括但不限于对适销性、某特定用途方面的适用性或不侵犯任何第三方知识产权的暗示担保。

这些资源可供使用 TI 产品进行设计的熟练开发人员使用。您将自行承担以下全部责任：(1) 针对您的应用选择合适的 TI 产品，(2) 设计、验证并测试您的应用，(3) 确保您的应用满足相应标准以及任何其他功能安全、信息安全、监管或其他要求。

这些资源如有变更，恕不另行通知。TI 授权您仅可将这些资源用于研发本资源所述的 TI 产品的应用。严禁对这些资源进行其他复制或展示。您无权使用任何其他 TI 知识产权或任何第三方知识产权。您应全额赔偿因在这些资源的使用中对 TI 及其代表造成的任何索赔、损害、成本、损失和债务，TI 对此概不负责。

TI 提供的产品受 TI 的销售条款或 ti.com 上其他适用条款/TI 产品随附的其他适用条款的约束。TI 提供这些资源并不会扩展或以其他方式更改 TI 针对 TI 产品发布的适用的担保或担保免责声明。

TI 反对并拒绝您可能提出的任何其他或不同的条款。

邮寄地址：Texas Instruments, Post Office Box 655303, Dallas, Texas 75265
Copyright © 2024，德州仪器 (TI) 公司